CHAPTER –7

CONTROL AND PROTECTION OF HYDRO ELECTRIC STATION

7.1 Introduction

7.1.1 Control System

The main control and automation system in a hydroelectric power plant are associated with start and stop sequence for the unit and optimum running control of power (real and reactive), voltage and frequency. Data acquisition and retrieval is used to cover such operations as relaying plant operating status, instantaneous system efficiency, or monthly plant factor, to the operators and managers. Type of control equipment and levels of control to be applied to a hydro plant are affected by such factors as number, size and type of turbine and generator. The control equipment for a hydro power plant include control circuits/logic, control devices, indication, instrumentation, protection and annunciation at the main control board and at the unit control board for generation, conversion and transmission operation including grid interconnected operation of hydro stations including small hydro stations. These features are necessary to provide operators with the facilities required for the control and supervision of the station's major and auxiliary equipment. In the design of these features consideration must be given to the size and importance of the station with respect to other stations in the power system, location of the main control room with respect to the equipments to be controlled and all other station features which influence the control system. The control system of a power station plays an important role in the station's rendering reliable service; this function should be kept in mind in the design of all control features.

Control of hydroelectric power plant is discussed in section 7.2.

7.1.1.1 Protection System

Forced outage due to faults in power system components e.g. generating unit, transformer bus bars, sub station and transmission lines affect reliability of power supply. Increasing spare capacity margins and arranging alternative circuits to supply loads are provided to take care of such failures. For minimum isolation following a break down the system is divided into zones controlled by switchgear in association with protective gears. Switchgear is designed to interrupt normal and fault current. Protection gear must recognize an abnormal condition and operate to secure its removal with the minimum disturbance to normal system operation. Protective gear defines all equipment necessary for recognizing; locating and initiating the removal of a fault or abnormal condition from the power system and includes a relay or group of relays and accessories to isolate electrical installation (machine, transformer etc.) or to activate a signal. Accessories are current and voltage transformers, shunts, d. c. and a. c. wiring and auxiliary devices necessary to secure successful operation.

Protection of hydroelectric power plant is discussed in section 7.3.

7.1.2 Technology

7.1.2.1 Control Systems

Upto 1980s, control of a hydro plant's generating units was typically performed from

governor panel or unit control switchboard. If the plant had multiple units, from a centralized control board was provided. The unit control board and centralized control board using relay logic contained iron vane meters, hardwired control switches, and hundreds of auxiliary relays to perform the unit start/stop and other control operations. All the necessary sensors and controls required to operate the unit or units were hardwired to the unit control board and/ or centralized control board, allowing operator to control the entire station from one location. Data acquisition was manual.

Modern systems still permit control of the entire plant from a single location. Modern control rooms utilize the far more cost-effective supervisory control and data acquisition (SCADA) systems (including programmable logic controllers (PLCs) and distributed computer control systems with graphic display screens to implement a vast array of control schemes. The SCADA control scheme also provides flexibility in control, alarming, sequence of events recording, and remote communication that was not possible with the hardwired control systems. Data acquisition, storage and retrieval is provided by the computer.

7.1.2.2 Protective Relay Technology

Protective relay technology has changed significantly is recent years. Induction disk relays for each individual protective function were normally used. Individual solid state static relays for protective function were introduced in the decade 1980-1990 and IS 3231-1965 was accordingly revised in 1987. Microprocessor based multi function relays are now being introduced. Advantage claimed for these relays are as follows:

i) Self monitoring of operating status on continuing basis and to alarm when to function.
ii) Multiple protective functions in one relay reduces panel space and wiring end.
iii) Self calibration by software programming
iv) Programmable set point by software programming

Microprocessor relaying has gained widespread acceptance among both utilities and consumers. The relay functions are the same as those in electromechanical and solid-state electronic relaying, but microprocessor relays have features that provide added benefits. Microprocessor relays may have some disadvantages, however, so that there are additional considerations when these are applied to the utility-consumer interconnection.

The benefits of microprocessor relays include the ability to combine relay functions into economical unit. Where an electromechanical overcurrent relay may be only be a single phase device, a microprocessor relay will often include three phases and a neutral. It could also include reclosing, directional elements, over/under voltage, and over/under frequency. A transmission line relay could combine multiple zone phase and ground distance elements, over current fault-detectors, pilot scheme logic, and reclosing. An electromechanical scheme will normally consist of individual relays for each zone of phase and ground protection, separate fault-detectors, and additional relaying for pilot scheme logic. Similarly, a microprocessor transformer relay might combine differential and overcurrent protection and a generator relay could include differential, overcurrent, negative, sequence, frequency, voltage, stator ground, and other protective functions. These same devices can include nonrelaying functions such as metering, event recording, and oscillography. All of these functions are contained in an enclosure that requires less space than the combination of elays and other devices they duplicate.

A microprocessor relay has self-monitoring diagnostic that provide continuous status of relay availability and reduces the need for periodic maintenanace. If a relay fails, it is typically replaced rather than repaired. Because these relays have multiple features, functions, increased setting ranges, and increased flexibility, it permits stocking of fewer spares.

Microprocessor relay also have communication capability that allows for remote interrogation of meter and event data and fault oscillography. This also permits relay setting from a remote location. The relays have low power consumption and low CT and VT burdens. They also increase the flexibility of CT connections. For instance, microprocessor transformer differential relays can compensate internally for ratio mismatch and the phase shift associated with delta-wye connections.

All of these features have economic benefits in addition to the lower initial costs and potentially reduced maintenance costs that microprocessor relays have when compared to individual relays.

Although there are fewer disadvantages than advantages. The operating energy for most electromechanical relays is obtained from the measured currents and/or voltages, but most microprocessor relays require a source of control power. Another disadvantages is that the multifunction feature can result in a loss of redundancy. For instance, the failure of a single-phase overcurrent relay is backed up by the remaining phase and neutral relays. In a microprocessor scheme, the phase and neutral elements are frequently combined in one package and a single failure can disable the protection. Similarly, a microprocessor transformer package that has both differential and overcurrent relaying provided less redundancy than a scheme comprising separate relays. The self-disgnostics ability of the microprocessor relay, and its ability to communicate failure alarms, mitigates some of the loss of redundancy. It may also be economical to use multiple microprocessor relay.

Microprocessor relays require more engineering in the application and setting of the relay though less work in the panel design and wiring. The increased relay setting flexibility is accompanied by an increase in setting complexity that requires diligence to avoid setting errors. Also, some relays have experienced numerous software upgrades in a short period of time. Microprocessor relays have relatively shorter product life cycles because of the rapid advance in technology. As a result, a specific microprocessor relay model may only be available for a relatively short period of time. As a failure may require replacement rather than repair, it may not be possible to use an exact replacement, which may require more engineering and installation work. Although less frequent testing may be required, when it is, it requires a higher level of training for the technician and more test equipment than is normally used with electromechanical relays in order to obtain the full benefit of all the features of the microprocessor relay. The self-monitoring capability of these relays is only effective if the alarm output can be communicated to a manned location such as a control center. Also, the remote communication ability assumes there is a communication channel available to the relay.

An issue of particular of particular interest to the application of microprocessor relays at utility-consumer interconnection is in defining responsibility for the application on the multifunction relay. For instance, in a multifunction generator relay, the over/undervoltage and over/underfrequency function may be the utility for islanding protection but the differential function is solely for the protection of generator. The utility may require that they set and test the over/undervoltage and over/underfrquency relays but may not want the

responsibility for setting and testing the differential function. In this case, the purchase of separate relays or relay packages should be considered.

A similar issue exists concerning the communication capability of microprocessor relays in utility-consumer interconnections. Both the utility and the consumer can benefit from the communication capability. In particular, the recorded history of events can be very useful in analyzing relay operations after a fault. However, for both to communicate directly with the relay will require special considerations. Both the utility and the consumer may be required to purchase software license for the communication software if that software is propriety. Also, they will both need to maintain the same versions of the software. The communication settings, such as modem baud rate, will have to be mutually agreed on. Some relays have security passwords, which restrict access. There may be one password to permit read only access to meter and event records and a different password to make changes. Although both parties may have read only access, ideally only one party should have the necessary access to make setting changes.

7.1.3 Power and Control System Single Line Diagram and Schematic

7.1.3.1 Graphic Symbols

Single line diagrams representing 3 phase by single line are generally made as a starting point in designing protection systems for hydro plants i.e. generators; transformers; circuit breakers etc. Graphic symbols used to represent various elements are generally as IS: 2032. Some generally used graphic symbols are given below. In case some other symbols are used same should be specified on the drawing.

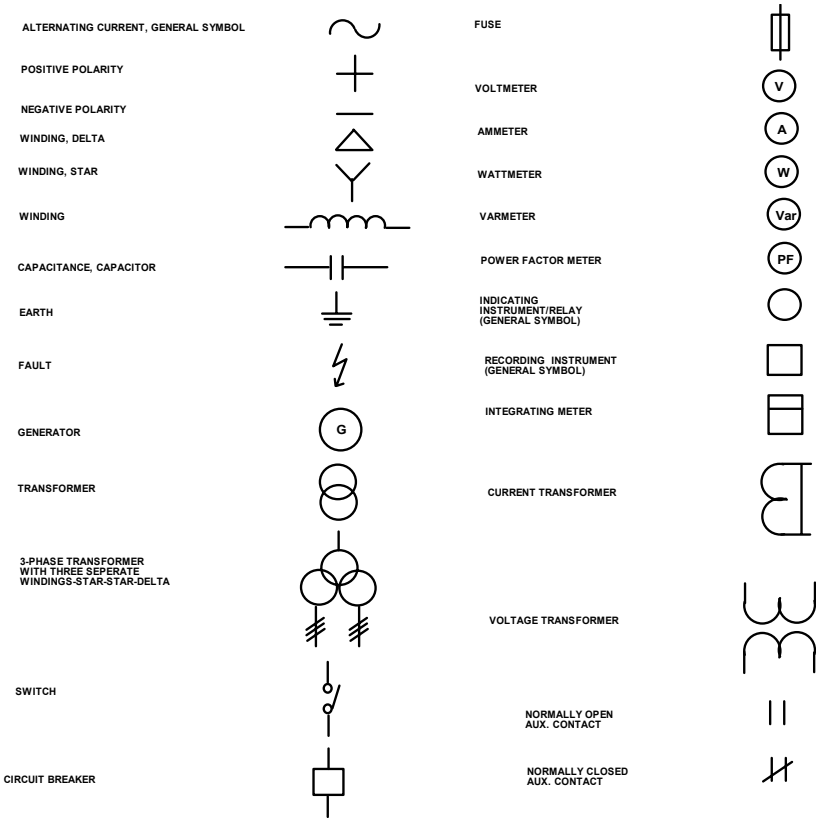

7.1.3.2 Device Numbers

Relays shows and protection clause are on schematic drawings are classified by 94 device function members used in generating station, sub station according to IEEE C37.2-1991. The use of prefixes and suffixes provide a more specific definition of the function. Commonly used device numbers are as follows. For complete list refer to IEEE publication 37.2.

5	-	Stopping device
12	-	Over speed or over frequency relay
14	-	Under speed or under frequency relay
21	-	Distance relay
23	-	Temperature control device
25	-	Synchronizing or synchronizing check device
26	-	Apparatus thermal device
27	-	A. C. under voltage or NO voltage relay
30	-	Annunciation relay
32	-	Reverse Power flow relay
37	-	Under current or under power relay
38	-	Bearing protective device
40	-	Field Failure relay
41	-	Field circuit breaker
46	-	Reverse phase or phase balance current relay
47	-	Phase sequence or phase balance voltage relay
50	-	Instantaneous over current relay
51	-	AC time over current relay
52	-	AC Circuit breaker
55	-	Power Factor relay
56	-	Field application relay
59	-	Over voltage relay
62	-	Time-delay stopping or opening relay
63	-	Pressure switch
64	-	Ground fault relay
65	-	Governor
67	-	AC directional over current relay
68	-	Blocking relay
71	-	Level switch
72	-	DC circuit breaker
76	-	DC over current relay
79	-	AC reclosing device
81	-	Frequency relay
85	-	Carrier or plot wire receive relay
86	-	Lock out relay
87	-	Differential protective (current) relay
89	-	Line switch

7.1.3.3 Suffix Letter

C	-	Closing relay/contactor
CS	-	Control switch
PB	-	Push button

U	-	"UP" position switch relay
X	-	Auxiliary relay
Y	-	Auxiliary relay
Z	-	Auxiliary relay
A	-	Air/amperes
C	-	Current
F	-	Frequency/flow/fault
J	-	Differential
L	-	Level/liquid
P	-	Power/pressure
PF	-	Power factor
Q	-	Oil
S	-	Speed
T	-	Temperature
V	-	Voltage
VAR	-	Reactive power
VB	-	Vibration
W	-	Water/watts

7.1.3.4 Schematic Drawings

Three line diagrams based on the single line diagram are made. Detailed wiring diagrams showing the terminal nos. are made by the supplier of equipment for actual laying of cables etc.

7.2 CONTROL OF HYDRO ELECTRIC STATION

7.2.1 INTRODUCTION

Hydroelectric stations are particularly well suited to automatic control because of the relative simplicity of control of both the prime mover and the hydraulic energy which drives it. These plants may be used for short periods as peaking stations when extra generating capacity is needed or as base load station for long periods when an abundance of water for generating power is available. Control of pump storage is not discussed.

7.2.2 Conventional Control System with Relay Logic (Mechanical/Analogue Electronics Governor)

Various methods of control are broadly classified under three main headings-manual, automatic and supervisory depending on the method of operation as detailed below. In the manual control each operation is performed or initiated manually whereas in automatic control a sequence of operations is performed automatically but the initiation of the sequence of operations may be performed manually or automatically. Supervisory control means the control of a equipments from a remote point when the distance between the controlling point and the equipment to be controlled is so great as to make direct wire connections impracticable or unduly expensive. Control schemes are broadly classified as follows:

a) **Manual Control:-** Whereby each item in the chain of the pre starting checks starting, synchronizing, loading and stopping and sequence is selected and performed in turn by hand whether mechanically or by push buttons.

b) **Semi- Automatic Control:-** Whereby from a single manual starting impulse a unit may be brought to the ready to sycnronise condition by the automatic selection, performance, and providing of a sequence of controls. Likewise a similar stopping impulse completely shutdown the unit. Synchronizing and loading and running control remain manual functions from the local and remote control, points.

c) **Fully Automatic Control:-** Whereby means are provided for running up, automatically synchronizing and loading upto a predetermined quantity on receipt of a single starting impulse. Subsequent manual variations of loading and excitation may be provided as a remote control function. The corresponding stopping impulse will cause the load to be reduced, the unit to be disconnected from the busbars and the turbine to be shutdown completely.

d) **Offsite Supervisory Control:-** Starting, stopping, switch closing or opening and other functions initiated from a remote point, together with indications of successful operations of voltage and load control and of the repetition of alarm conditions at the remote control point. The equipment is ancillary to either semi-automatic or fully automatic unit control.

7.2.2.1 Control of unit Operation

The control of the unit operation is generally as follows. Unit is started from the unit control board located near the unit or governor panel but synchronization and loading is performed from the central control room. Otherwise unit may be started, synchronized and loaded from the central control room in the centralized control system. Both types of controls had their own advantages and disadvantages.

Based on control of unit operation and type of control schemes of pre start checks starting, synchronizing, loading and stopping from a central control room are made. Starting of the unit may be performed by means of a sequence master controller switch installed on the control panel of each unit. The master controller switch in the first step of its sequence generally opens main inlet valve and start unit auxiliaries. In the second step, the turbine is started and brought upto speed no load and field breaker is closed. In the third step the paralleling of the unit is carried out and unit synchronized with the generator bus by closing generator breaker. In the last step the loading of the unit to a preset value is carried out. Master controller switch in a similar way is used for controlled action shutdown. Starting, synchronizing and loading automatically on receipt of single starting impulse is provided in automatic hydro stations. A control scheme for automatic accelerated starting of the pre-selected unit on system frequency drop is sometimes provided in frequency controlling station as in Right Bank Bhakra power plant.

7.2.2.2 Peaking Operation

Later developments in the control of the hydro power plant and modifications in the control scheme relate essentially to reducing the starting time of the peaking frequency controlling hydro plant and also to reduce change over time of the pumped storage plant from pumping mode to generating mode. Peaking hydro plants are subjected to frequent start run stop cycle. This causes the brake lining to wear more quickly. The debris released from the brake linings are carried into the stator housing by the ventilating air. These deposit on the windings and thus prevent effective transfer of heat from the winding to the cooling air. To overcome this problem dynamic braking and special methods of brake dust collection were provided.

A centralized control room with main operator at one level was preferred for large hydro-electric stations in India because this type of control was considered more reliable. Bhakra and Beas complex power stations were designed on this basis.

7.2.3 Computer Based Control of Hydro electric Station

7.2.3.1 Current practice for control of hydroelectric plants is based on the combination of computer based and non computer based equipment utilized for unit, plant and system control.

7.2.3.2 Methods of control:- Local, centralized and offsite modes of operation and supervision as per IEC 62270 and IEEE 1010 and recognized by industry is given in table 2.1. Control as defined in the table 2.1 with details of control interface for plant equipment based on modern practice are discussed and control system design in accordance with standards mentioned.

Table 2.1 – Summary of control hierarchy for hydroelectric power plants

Control category	Subcategory	Remarks
Location	Local	Control is local at the controlled equipment or within sight of the equipment
	Centralized	Control is remote from the controlled equipment, but within the plant
	Offsite	Control location is remote from the project
Mode	Manual	Each operation needs a separate and discrete initiation; could be applicable to any of the three locations
	Automatic	Several operations are precipitated by a single initiation; could be applicable to any of the three locations
Operation (supervision)	Attended	Operator is available at all times to initiate control action
	Unattended	Operation staff is not normally available at the project site

7.2.3.3 The control system receives input signals from main equipment such as the turbine or the generator, and from various other accessory equipment, such as the governor, exciter, and automatic synchronizer. Status inputs are obtained from control switches and level and function switches indicative of pressure, position, etc. throughout the plant. The proper combination of these inputs to the control system logic will provide outputs to the governor, the exciter, and other equipment to start or shutdown the unit. Any abnormalities in the inputs must prevent the unit's startup, or if already on-line, provide an alarm or initiate its shutdown.

For multiple unit sites, each unit may be equipped with a unit control located physically close to the individual units and a centralized control panel located in the control room. For a plant with only one unit, the unit control switchboard may be located at the control room.

The unit control board is designed to perform the following functions:

1. Information receipt and monitoring

2. Start/stop control sequencing
3. Annunciation of alarm conditions
4. Temperature information monitoring
5. Metering and instrumentation signals display
6. Event recording, when required
7. Synchronizing and connecting the unit to the system
8. Control of real/reactive power

The unit control centre board is the central control means and communicates with the unit and associated equipment through hard wire.

7.2.3.4 Information and Control Signals

Basically, there are four types of signals that may be provided between the control board and any particular piece of equipment.

1. Analog inputs to transmit variable signals from the CTs, PTs, resistance temperature detectors (RTDs), thermocouples, pressure, flow, level, vibration, or other transducers.
2. Digital inputs (typically contact closures) to provide status, or digitized values of variable quantities from the equipment.
3. Digital outputs to send command signals (ON and OFF) from the control board to the equipment.
4. Analog outputs to transmit variable signals from the control board to equipment such as the governor, voltage regulator, etc.

The communication links between the control board and the equipment should be adequate to transmit information and control signals. Information signals are the signals sent to the control board. Control signals are the outputs leaving the control board to various equipment.

Information signals to the control board come from the following;

1. Generator neutral and terminal equipment
2. Head water and tail-water level equipment
3. Penstock
4. Turbine

Information and control signals are needed between the control board and each of the following:

1. Unit transformer
2. Circuit breaker and switches
3. Generator
4. Intake gate (and/or inlet valve) and draft tube gate
5. Turbine speed governor
6. Generator excitation system
7. Synchronous condenser equipment
8. Auxiliary equipment

Interconnection of the following auxiliary equipment is also required.

1. Fire protection
2. AC power supply
3. DC power supply
4. Service water
5. Service air

The above equipment represent auxiliary service equipment needed for the proper operation of the generating plant. Abnormal conditions of this equipment need to be alarmed.

7.2.4 EQUIPMENT TO BE CONTROLLED

Although machines differ widely in physical appearance, there are comparatively few basic types of turbine and main controls described below are common to all. Major components of a hydro electric plant for control are given in figure 2.4.

The elements to be controlled in hydro power stations are intake gates, main inlet valve, turbine, governor, the lubrication system, the excitation of the generator, main circuit breakers. Each of these elements has a particular function in the over all operation. The intake gate and main inlet valve render the plant inoperative and conserve water during shutdown period of the plant. The turbine gates under the control of the governor admit water in the runner in proportion to the load requirements of the turbine. The lubrication system establishes a lubricating film on the bearings during starting and maintain it during operation, and circulate the lubricant so that it can be cooled. The voltage regulator controls the excitation of the generator in keeping with the voltage requirements and demand for reactive power output of the generator. The generator field circuit breaker provides a means of field interruptions during faults and thereby minimising damage to the generator and the other equipments. The generator line circuit breaker serves to connect the generator to the grid system after the generator has been started. It also disconnects the generator from the system prior to shutdown or following an electrical fault.

7.2.4.1 Intake

Some means for cutting off the water supply to the turbine are required to avoid wasteful leakage when the unit is shut-down and dewatering is required to permit access for maintenance of the connecting penstocks. Penstock gates at the intakes and inlet valves adjacent to the turbine are provided for this purpose. The intake has a motor or hand lifted, gravity lowered gate and valve, preferably with an automatic release operated by an excess flow device if a burst occurs in a pipe line. When a tunnel and pipeline connect the reservoir to the turbines, an additional valve may be provided at the junction of the tunnel and the pipe line if the latter is long, and either this valve or the intake gate should be arranged for remote closure in an emergency.

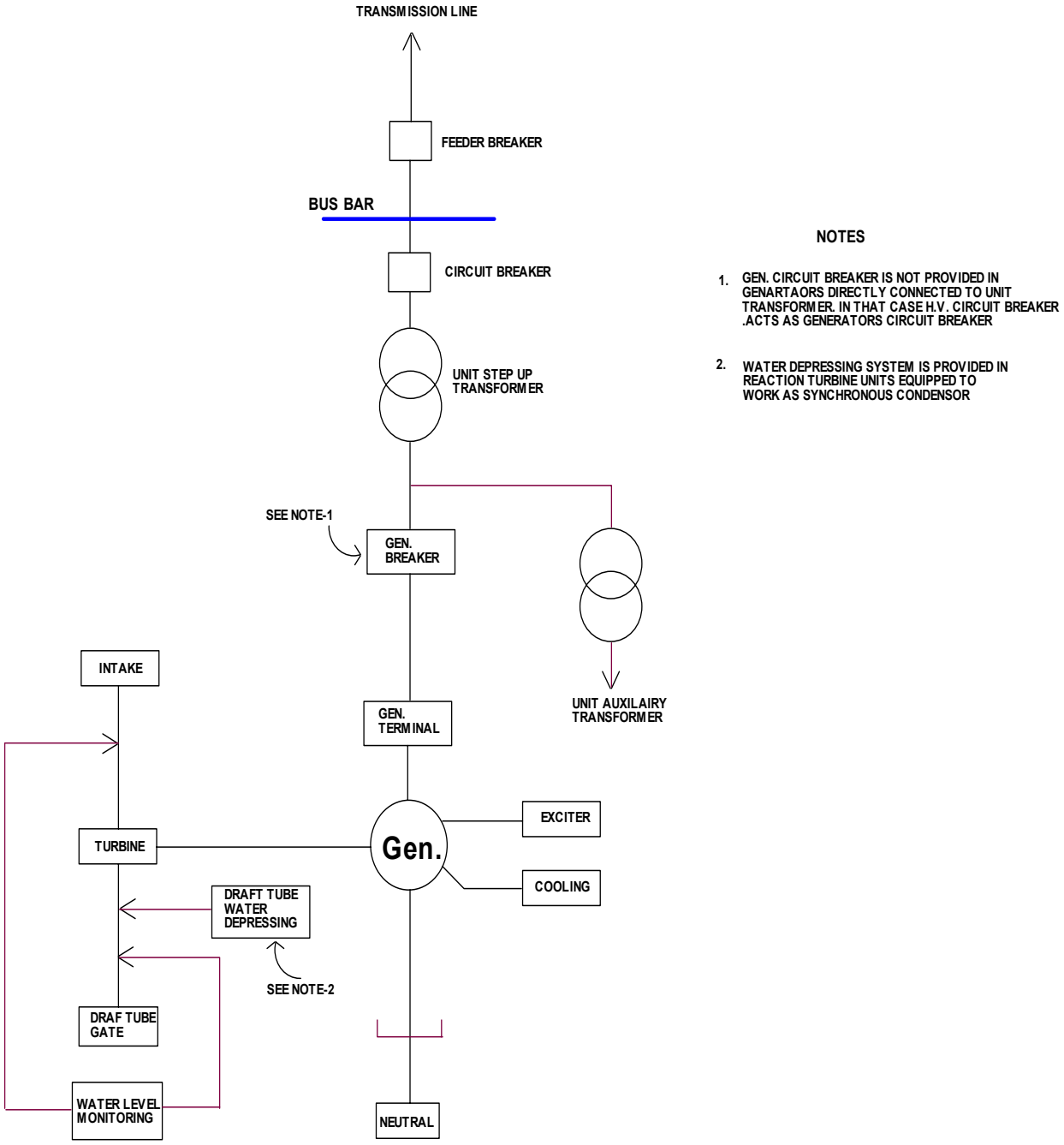

Fig. 7.2.4 Major Components of a Hydro Electric Plant

Main inlet valves at the turbines are either butterfly valve type or spherical type depending upon the head at the turbine inlet. All types of valve incorporate arrangements for slow filing of turbine casing by crack opening or by special bypasses. Main inlet valves are generally opened by oil servomotor. The opening motion of the main inlet valve is preferably interlocked so as to open the valve only when balanced water head pressure is established on both sides of the valve. The main inlet valve and the intake gate are final safeguards against turbine or pipeline disasters respectively, and the shutdown control must be absolutely reliable.

7.2.4.2 Turbine Control

This is the speed/load control of turbine and governor is the main controller in which the governor adjusts the flow of water through the turbine to balance the input power with the load. In case of small plants in the range of micro hydel (upto 100 kW unit size), load control is also used, where excess load is diverted to dummy load to maintain constant speed. With an isolated system; the governor controls the frequency. In interconnected system, the governor may be used to regulate the unit load and may contribute to the system frequency control. Figure 7.2.4.2 shows the different types of control applicable to turbines. Governor functions are given below:

Runner Water Admission: The admission of water to the runner in accordance with load demand is controlled by needle adjusted nozzles in impulse turbines and by guide vanes in reaction turbines. All these form of control employ oil-servomechanisms. Rapid fluctuations of flow may cause disastrous water hammer fractures. Minimum governor closing times in reaction turbines are fixed and gradual closures /opening is provided to avoid water hammer pressure rise or drop limits. In impulse turbines, deflector plates take the jet off the runner instantaneously, the jet being cut off gradually afterwards. In Kaplan machines the runner blades are variable pitch and are adjusted simultaneously with the guide vanes by means of oil servomotor within the runner hub. In semi Kaplan turbines with fixed guide vanes opening is adjusted to water requirements for load.

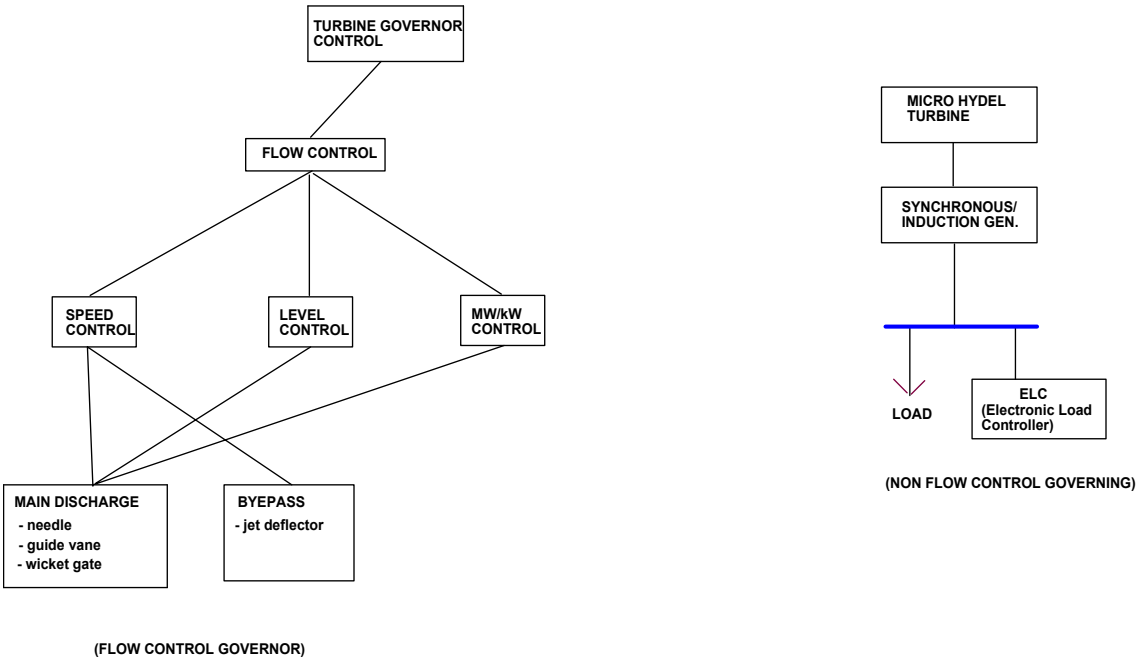

Fig. 7.2.4.2 Schematic Overview of Turbine Control

Governor Servo System: To meet the intermittent oil demands of the servomotors, each turbine has its own oil /air reservoir fed by oil pumps with an automatic unloader valve. The initial air charge may be provided by a separate compressor, but the subsequent air leakage must be compensated for by an automatic air compressor controlled by the sumplevel. The oil pressure receiver which is partially filled contains enough energy stored in the pressure oil so

as to ensure full closure of the nozzles or guide vanes in an emergency. The servomotor oil admission is controlled by the governor. The main servomotor operates, through direct mechanical linkage, the deflector plates, nozzle of impulse turbines, or guide vanes of reaction turbines. Frequent load fluctuations entail continuous pumping which may over heat the oil, and governor instability sometimes results. Water cooling is therefore sometimes provided in the oil sump.

Governor Drive and Speed Setting: The permanent magnet generator (PMG) attached to the generator shaft supplies the electric power to drive a synchronous motor that drives the rotating portion of the speed sensitive device of mechanical hydraulic governor. Mechanical governors are not used now. Electro-mechanical PID governor with speed and power control section and mechanical hydraulic actuator sections are now generally employed. Speed /power control section and hydraulic actuator sections may be installed in separate locations. In case of small hydro speed sensing may be done by taking frequency signal from PTs. Governors are designed to regulate the speed and thereby the loading on the unit within a desired range by increasing or decreasing the amount of water supplied to the turbine runner. Turbines are fitted with gate limiters which are can be remotely controlled. The gate limiter are used for speed no load setting; desired control setting and over load of generators. The gate limiter adjustment usually extends down to zero and thus affords a means for remote stopping and starting at a safe and controlled rate.

7.2.4.3 Types of Turbine Governor

Flow control turbine governor generally used for control and monitoring of hydraulic turbines consist of 2 district section. Figure 2.4.3 shows a typical governor specified for 9 MW Kaplan turbine.

a) Speed and power control section
b) Mechanical/hydraulic actuator

mechanical/hydraulic actuators is for control of wicket gate/nozzle control for all types turbine and blade angle control for Kaplan turbines in addition to wicket gate control. Size and type of governor is based on the capacity of the actuator.

7.2.4.3.1 Speed and Power Control

Three types of governors for speed and power control of hydraulic turbines are in use.

a) Mechanical governor
b) Analogue electronic governor
c) Digital electronic governor

7.4.3.2.2 Mechanical governor

Mechanical governor were universally used hydro upto 1965 or so. In these governors a synchronous motor run by a shaft permanent generator senses the speed and fly balls fixed to sleeves control the pressure oil system for servo motor control. Speed sensing and control section are physically linked to mechanical hydraulic actuator. Performance adjustment of signals for stable operations i.e. permanent speed droop, temporary speed droop and dashpot

time are by adjusting mechanical linkages. Automatic control scheme with mechanical governor for an SHP is enclosed as Annexure 7.2.1.

7.2.4.3.3 Analogue Electronic Governor

In electronic governors hydraulic actuators speed sensing is by speed signal generator (SSG). The signal is converted to proportional voltage signal and amplified in a magnetic amplifier. Electronic hydraulic transducer converts proportional signal to release proportional pressure oil for servomotor operation. Feed back control is again by mechanical linkages. Control linkages i.e. feed back are mostly mechanical.

7.2.4.3.4 Digital Electronic Governor

Speed sensing and its processing is digital. PID digital speed control can be combined with unit and plant control functions. All linkages are electric it is least expensive.

Speed sensing is by a digital signal i.e. proximity switches etc. feed back control i.e. restoring

mechanism (position of wicket gate servomotor) is by electric signal. Examples of digital control are detailed in Annexure 7.2.2.

7.2.4.4 Lubrication System

The lubrication system includes the facilities required for lubricating both the turbine and generator. In most cases, the generator lubrication system is self contained and, therefore, does not require auxiliary pumps. However, large machines may have bearing lift pumps for use during starting. Some high speed generators use pumps for circulating the lubricant after the machine is running. Oil is circulated through those oil coolers by circulating oil pumps. Automatic control scheme must consider the operating requirements of the lubrication system during starting, running and shutdown.

7.2.4.5 Generator Control

This is the excitation control of synchronous generator. The excitation is an integral part of a synchronous generator which is used to regulate the operation of the generator. The main functions of excitation system of a synchronous generator are:

1. Voltage control in case of isolated operation and synchronising
2. Reactive power or power factor control in case of interconnected operation.

Generating Cooling System: Generator cooling involves air circulation by rotor fans. Generators are usually ventilated on the closed circuit system in which the same air is continually recirculated and passes through water cooling units. The water supply for both oil and air coolers can readily be drawn fro the turbine casing, thorough reducing valves and strainers, so that it flows automatically when the main inlet valve opens. When water head is high it is more economical to pump from the tail race/draft tube. Each turbine may then have its own pump, generally with one standby common to all units. In small hydros cooling water is some times pumped from underground by submersible pump to avoid elaborate treatment plant for cleaning water.

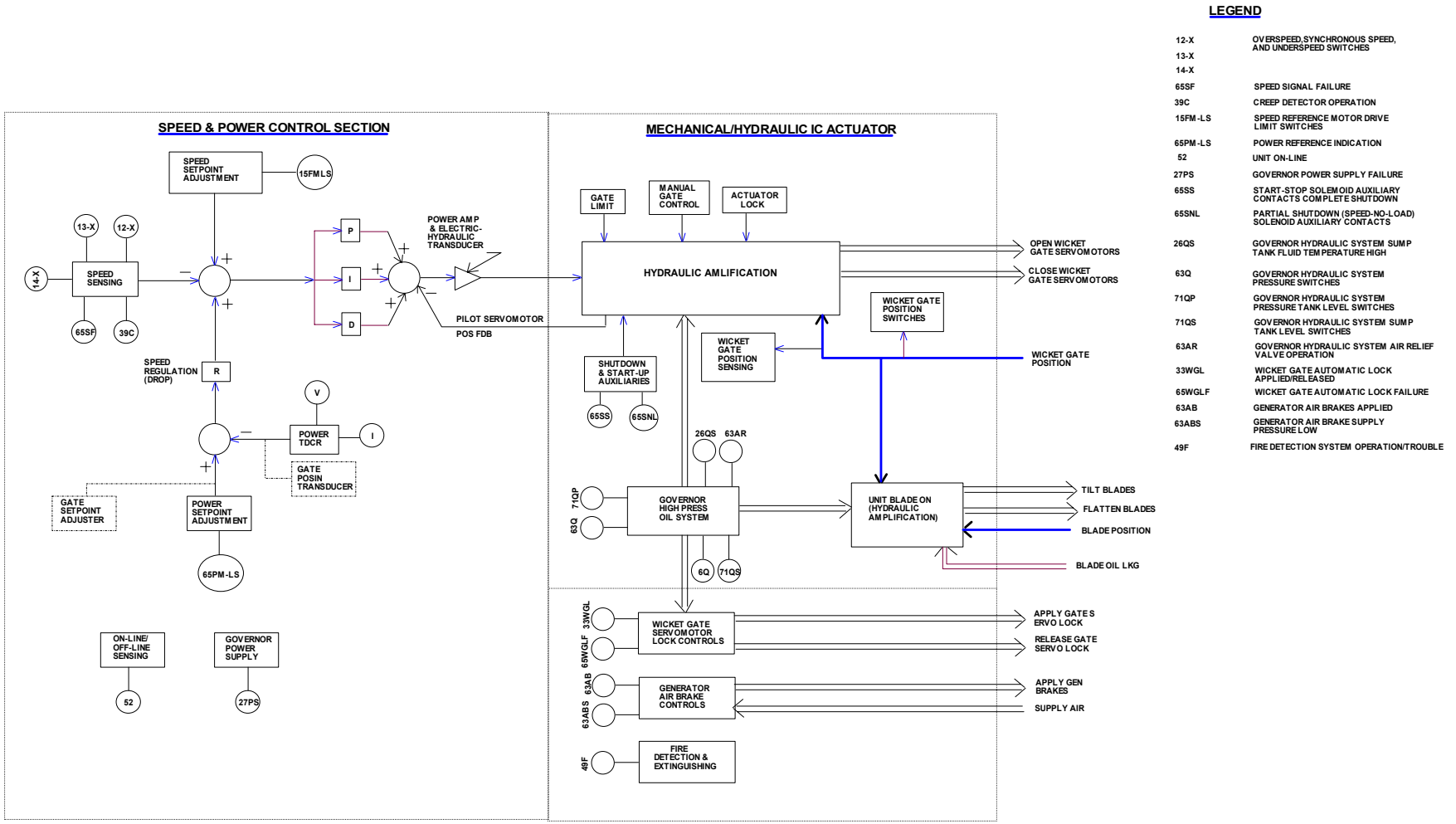

Fig. 7.2.4.3 Electric Hydraulic Turbine Governor Control & Monitoring System

Braking and jacking System: Braking assists big machines to minimize bearing wear by restricting protracted slow running before stopping. Impulse turbines have separate reverse acting jets controlled by independent oil servomotors. When remotely controlled these jets must be cut off when the machine has stopped to prevent counter rotation occurring. The heavier vertical machines require more powerful brakes in the from of oil jacks under the generator rotor which press friction pads against a special rim, the pressure being applied through air/ oil reservoir. The same brakes are employed as jack for lifting the rotor, (the pressure being applied by a high pressure oil pump and suitable valves). For with drawing the thrust pads and to assist in other dismantling operations. In addition, jacks are sometimes used to lift the rotor before starting in order to flood the thrust bearing pads.

Excitation System: Shaft mounted D. C. excitation system whose field may be controlled by pilot exciter or directly by motor driven amplidyne are not generally used now. Most common form of excitation system in unit control system in static excitation system (potential source controlled rectifier high initial response excitation system) as shown in figure 7.2.4.5. Small generators upto about 10 MW employ brushless excitation system.

The field circuit breaker and discharge resistances are mounted in a separate cubicle and placed by the site of AVR panel. Field beaker serves to interrupt the field during faults. In some cases of rapid rough synchronizing, the generator breaker may be closed first and is followed by rapid closing of field circuit breaker.

7.2.4.6 Miscellaneous Equipment

Generators are generally provide internal heaters for preventing moisture condensation after shutting down and for avoiding deterioration of the insulation and iron laminations. Some leakage through the cover gland generally occurs with vertical turbines (especially at low head stations without inlet valve). This requires ejectors or level controlled motor driven pumps. Gravity drainage of the turbine cover via hollow fixed vanes to the draft tube or to the station sump, is sometimes possible for vertical reaction turbines. Horizontal set stations can generally draw leakage water to the tail race if the suction head is positive, but the depth of the spiral casing of vertical set stations necessitates sump with level controlled drainage pumps. Embedded pipe work systems are often employed for vertical sets to connect draft tube and relief valves to a common sump so that all water may be removed and access for maintenance is permitted after the insertion of draft tube stoplogs.

7.2.4.7 Main Breaker Control

Large generators are generally unit connected that is the generators are directly connected to their transformers without any intervening switchgear and the generator transformer leads are connected to the busbars through the high voltage circuit breaker. This most general from of connection will be discussed for the purpose of the control in large generator. In small and medium class plants generator circuit breaker is provided and bus at generator voltage is sometimes provided. The generator line circuit breaker serves to connect the generator to the system after the generating unit has been started, voltage built up and synchronized to the system. Generator circuit breaker whether high voltage in unit corrected generator or generator at generation voltage in case of small and medium units disconnects the generator during normal shutdown. However, the opening of the circuit breaker during emergency

stopping is initiated by electrical and mechanical protection operation and by overspeed device. The necessary control for this purpose is to be provided.

7.2.4.8 Auxiliary System

7.2.4.8.1 Mechanical auxiliary system

Mechanical auxiliary systems and equipment are applied as required for the particular installation. These may include the following and detailed is chapter 9.

(i) Cooling Water System

This system provides cooling water for the generator stator and bearings, the turbine bearing and packing box and for OFW type unit transformer (if provided).

(ii) Air compressor

This auxiliary is used to provide air for the governor and for other equipment, such as air brakes and maintenance equipment.

(iii) Dewatering and drainage system for Power House

Dewatering system is required to dewater the pen stocks for maintenance and require elaborate arrangements for reaction type units and require intake gates for the pen stocks and draft tube gates. Water level control equipment for dewatering sumps is required.
If natural drainage is not possible to remove leakage water then drainage sumps are provided with automatic level control equipment.

(iv) Ventilation and Air Conditioning Equipment

(v) Fire Protection Equipment

7.2.4.8.2 Electrical Auxiliary

Following electrical auxiliary system are provided and their control incorporated in the control system as detailed in chapter 8.

(i) Auxiliary Power AC System

This includes auxiliary transformers and switchgear for the auxiliary.

(ii) DC System and Batteries

This includes DC batteries and switchgear for control, emergency lighting, generator field flashing etc.

(iii) Lighting System

(iv) Telephone and Code Call System

(v) DG Sets or Station Service Hydro Auxiliary Units

7.2.5 CONTROL OF UNIT OPERATION

Depending upon the method of control and location of control points, the control of unit operation may be discussed under the following main headings in existing power station. Modern methods of control are discussed in Para 7.2.9.

7.2.5.1 Local Manual (Mechanical or push button) control

In this type of control, unit auxiliaries are started manually or by electrical push buttons mounted locally. The successful operation of auxiliaries is indicated by lamps mounted at the equipment or verified by visual inspection. Any abnormal operation of these auxiliaries during running is displayed by an alarm fitted locally. Necessary electrical interlocks in the starting circuit of the turbine may be included. The turbine is started from the governor panel. An operator at the panel adjusts the speed of the turbine and the excitation to bring the unit to ready to synchronize condition. Then he transfers the unit to control room for synchronizing and loading. Once the unit is synchronized, the adjustments of load and excitation are carried out by the control room operator. When a unit is taken out of service, the control room operator first unload the unit and then trips the main circuit breaker. The stopping of the unit and its auxiliaries is performed by the operators at the machine level.

This type of control is simple but require large number of operating personnel at various floors of the power house. Smaller lengths of control cables and lesser number of control relays are required. Such schemes are difficult to modify for converting the controls to remote/automatic control type. These are not employed for large power stations. For small hydros where integrated governor and plant control function are employed and equipment placed in one floor this is employed.

7.2.5.2 Local Control of Unit from Unit Control Board

Generally controls of auxiliaries and the unit are brought to a centrally located control board near the generator at machine floor level. This board is called Unit Control Board (UCB). In such type of stations valves in cooling water, pressure oil and air supply circuits are motor operated. Cables are run from various motor starters to the UCB for start/stop operations. An operator at the UCB starts the unit auxiliaries. Their successful operation is indicated on the UCB. The necessary interlocks are included in the turbine starting circuit. Operator then starts turbine and brings it to speed no load position by adjusting the speed and excitation. Then the transfers the unit to the central control room for synchronizing and loading.

This type of control involves cable connection between UCB and various auxiliaries. The scheme enables single operator to supervise the unit and its auxiliaries from UCB. However, separate operators are required at the control room. This scheme is favoured specially for power stations having large number of units because the cost of the cables for taking all controls to the central control room would be high. Generators, transformer and busduct protective relay panels may be mounted near the UCB and only alarm indications may be taken to the central control room. Line and Busbar protective relay panels may be mounted behind the control panels in the control room if the cable lengths involved between

switchyard equipment and the control room are small. If the distance is greater, these panels are mounted in a separate switch room at the switch yard and only necessary controls and indications are brought to the central control room.

This type of unit control still requires co-ordination of operators at two levels – one at the UCB and the other at the control room. However at later date the scheme could easily be modified for converting it for remote/automatic control.

This scheme is quite common in existing large stations.

7.2.5.3 Control of Unit from Central Control Room and offsite Supervisory Control

In this type of control, the controls of the auxiliaries and the unit are brought to a desk/panel in the control room. This involves taking all cables from the unit and its auxiliaries to the central control room. Hence this scheme is normally recommended for stations having smaller number of units. The scheme enables operators at the central control desk to supervise and control the unit from a single controlling point. There is no problem of coordination among the operators as the responsibility of starting auxiliaries, turbines and their control on a single operator in the control room. All alarms and indications are brought to a common annunciator board in the control room. The protective relay panels of generator, transformer and busducts may be located near the unit in the machine hall and only indications may be brought to the common annunciator board. Busbar and line protective relay panel locations depends upon the distance between switchyard and the control room and arrangement may be as explained above.

The unit control from the central control room may be by sequence controller switch as in Bhakra Left Dehar Plant or it may be fully automatic as in Bhakra Right Bank. In the former, control switch puts the unit in operation by performing the four sequence stages, that is, opening the inlet valve and starting unit auxiliaries, opening turbine gates, parallel and loading. The sequence control switch in the reverse order stops the turbine. In the latter, a single starting impulse energizes a master start relay which starts unit auxiliaries, opens turbine gates parallel and load the unit to a predetermined value.

Supervisory control from an offsite station of a group of power stations is also provided sometimes. Schematic overview of power plant automation with supervisory control and data acquisition (SCADA) system is shown in fig. 2.5.3.

7.2.6 SYNCHRONIZING

7.2.6.1 Synchronizing

Before connecting a generator in parallel with the other machines it is necessary to prove that the incoming machine and the running system have the same frequencies and voltages and are in phase. The methods employed in hydro power stations are described below.

Manual Synchronizing: In this method incandescent lamps are connected across the respective phases of the incoming and running voltage buses. Voltage of the incoming machine is matched with the system voltage by manually adjusting the excitation of the machine. The frequency and phase angle difference are indicated by lamps. Lamps will flicker with a frequency equal to the difference between the frequencies of incoming machine

and the running system. When the phase and frequencies are matched the lamps will extinguish. This is the indication of the synchronism of the machine with the system. The breaker is then closed manually.

Manual synchronizing is simple and cheap. This requires personal supervision and judgment of the operator. This type of synchronizing is not suited for automatic or remote control of the unit. However, this has normally been provided as a standby in power stations for use in case of failure of automatic/synchronizing equipment. In Micro hydels this method aided by synchroniser is utilized.

Automatic Synchronizing: Synchronizing equipment performs the following functions automatically.

(i) It continuously controls the terminal voltage of the incoming machine until it is almost equal to the voltage of the system to which it is to be connected.
(ii) It controls the speed of the prime mover so that the frequency difference is within the predetermined value.
(iii) It energizes the closing coil of the circuit breaker associated with the incoming machine at an instant when the phase difference between the two source is sufficiently small and only when the conditions (i) and (ii) have been simultaneously satisfied.

Auto synchronizing equipment perform the above functions through the speed, voltage and phase matching relays. It energizes breaker closing coil at an exact time in advance of synchronism so that the time consumed by the breaker in closing is just equal to the time consumed by the generator in arriving at exact synchronism. The time for advance action of closing is adjustable in auto-synchronizing equipment.

The main disadvantages of the automatic synchronizer is that if the system is disturbed, i.e., the frequency of the system is failing due to the tripping of certain generators or due to the sudden addition of large loads, it may then take very long time to synchronize the unit with the system. Sometimes it may not be even possible to synchronize the machine. Under such conditions the manual synchronizing method could be used.

Self Synchronizing: In this method the generator circuit breaker is closed after the unit has accelerated to approximately 95 percent of the rated speed. Field is then applied immediately after the generator breaker is closed. Earlier, this method of connecting the unit to the system was recommended for smaller units as compared to the system size for it causes disturbance in the system. However, this method has also been employed now a days to large units for providing quick relief to a system when frequency of the system is falling. The provision of such type of synchronizing is made in the Bhakra Right Power Plant.

The method has got advantage as the voltage and phase of the incoming machine need not be matched with the system frequency before closing the generator circuit breaker. The scheme for large units employ frequency difference relay to automatically close the circuit breaker when the difference in frequencies is within the predetermined value.

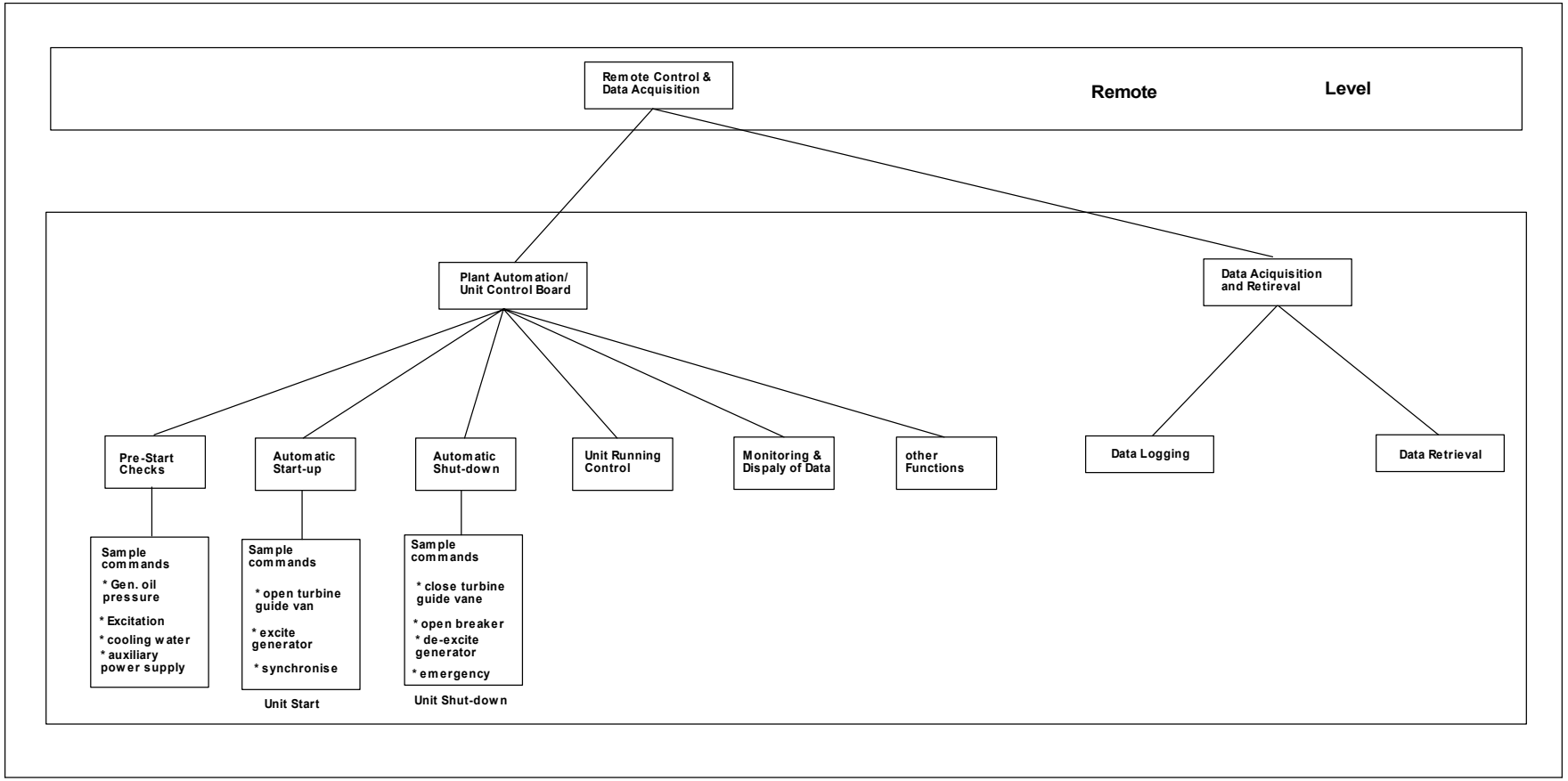

Fig. 2.5.3 Schematic overview of power plant automation with supervisory control and data acquisition (SCADA) system

7.2.7 MACHINE RUNNING SUPERVISION

7.2.7.1 Machine Running Supervision

Once the unit is started and synchronized with the system, the operating personnel in the control room have to perform or supervise the following four important functions of the unit.

(i) Load-frequency control
(ii) Reactive power and voltage control
(iii) Hydraulic control
(iv) Supervision of alarm and protective equipment

Functions of the above four are discussed below:

7.2.7.2 Load Frequency Control

In an isolated system consisting of a generator and load, the varying demand of the load can be satisfied entirely by the governor action. The governor of the unit is set to maintain the frequency at 50 Hz by setting the speed droop indicator to zero. The machine speed will be maintained exactly at 50 Hz with varying load demands provided the amount of load is not greater than the units ability to carry it.

When a unit is operating in a large interconnected system it is not, and is indeed virtually, impossible to set all governors to respond isochronously to maintain constant frequency. In such cases unit speed droop is set at 3 to 5 percent depending on the system's load sharing requirement. A governor set on 5 percent speed droop will cause its generator to accept 100 percent of its capacity when there is frequency droop of five percent. Depending on its regulating ability, unit can be adjusted to help maintain system frequency, which is the exact indication of the balance between supply and demand. The operator in the control room, on receipt of orders from the central load dispatch office, adjusts the speed level of the unit to assist the system to maintain frequency at 50 Hz. In the case of units fitted with automatic load-frequency control device, the speed level is adjusted by load frequency control equipment and even by the load dispatch office itself.

7.2.7.3 Reactive Power and Voltage Control

When the unit is serving isolated load, its terminal voltage is held to a schedule value by means of continuously acting automatic voltage regulator. The reactive power requirements of the load connected to it are adjusted by excitation control called power factor control. When unit is connected to a large power system, i.e. to an infinite bus, the voltage the frequency of the bus and hence of the generator terminal are held under control and bus voltage is not affected by changes in the excitation of the generator. Once the generator is paralleled with the system, it assumes the system voltage and any change in its excitation results only in changing its kilovar loading and its power factor. Generally the unit is operated at rated kilovar load. The maximum and minimum excitation applied to the generator is dependent upon the reactive power capability of the unit. On the high side, the limitation is field and armature overheating, and on the low side the limitation is stability and loading power factors.

7.2.7.4 Hydraulic Control

Associated with each hydro-electric station there will be a number of hydraulic items to be brought to the power station control room. These items may be selected from the following.

(i) Headrace storage, level indication and gate control
(ii) Tailrace level indication
(iii) Secondary storage level indication and gate control
(iv) Flood control including special gate operation, position indication, discharge and alarm
(v) Intake gate control and indication
(vi) Irrigation water release and discharge indication
(vii) Surge tank water level indication
(viii) River control and discharge indication for statutory obligations to other users such as fishery authorities, chemical works, water supply authorities if any

Spillway gates may be operated locally by hand or motor control, remotely by supervisory or direct control of motor winches, or automatically. When automatic operation occurs, it is desirable to give an alarm at the attended point, and preferably to record the duration of the flood discharge. Many dams and intake works have sufficient indication and control facilities to warrant supervisory control equipment. The necessary pilot cables must be taken from a route not affected by flood any time.

7.2.8 Supervision of Alarm and Protective equipment

The object of an alarm equipment in any power station is two fold. Firstly, it enables the duty staff to determine quickly the nature of the incipient faults. Secondly, to record transitory fault occurrences for subsequent analytical investigation. For mechanical troubles, the number of displays is a matter of opinion and cost. But it is pertinent to display not only those conditions which cause shutdown but also various non-trip conditions. In the operator's room these may be further classified as 'urgent' and 'Non-urgent' to help operators realize the urgency of the action needed. Generators are provided with minimum necessary protection against electrical and mechanical faults. Relays have flag indicators to indicate their operation. The operator's attention is drawn by an audible alarm on the alarm panel and by flashing light. Operators must on occurrence of trouble or fault attend to it and maintain a record of the nature of the trouble and instruct maintenance staff to carry out the repair rarely.

7.2.9 Modern Control System

Modern Control System employ computer logic. Unit control board (UCB) is hard wired all equipment to be controlled and is provided with computer. It is used for local control. If required UCB is connected to central control room/offsite control by multiplexing.

7.2.10 Sequencing

Control Sequencing: Regardless of the degree of automation desired, certain sequence of events during start-up and shut-down are required.

7.2.10.1`Unit Starting Sequence

i) Pre-start check
ii) Auxiliaries start
iii) Start turbine to speed no load position
iv) Synchronizing (generator breaker closing)
v) Loading and running

7.2.10.2 Unit Shut Down Sequence

Control system is designed for following three types of unit shut down.

i) Normal shut down
ii) Partial shut down
iii) Emergency shut down

7.2.10.3 Normal Shut Down

Normal shut down, where in the unit is off loaded by gradually closing wicket gates to speed no load position so that load is transferred to other units in the grid. As unit speed decreases thrust bearing oil lift pump is started and at about 30% speed, the brakes are applied, until the unit is stopped. The unit auxiliary systems are shut down and turbine Inlet valve if used is closed. Shut down logic is shown in figure ……

7.2.10.4 Partial Shut Down

In partial shut down where due to some electrical system faults, the unit is removed from the system and brought to speed no load condition by opening generator breaker. Auxiliaries are not closed. As soon as system fault is cleared the unit is synchronized to the system (figure …..).

7.2.10.5 Emergency Shut Down

7.2.10.6 Quick shut down or mechanical trouble shut down

A quick shut down or mechanical trouble shut down is initiated by problems such governor oil pressure, bearing high temperature etc.

Typical start up and shut down sequencing diagram are shown in figure 7.2.10.1, 7.2.10.2 and 7.2.10.3.

Fig. 7.2.10.1 Typical Electrical Trouble (emergency) Stop Sequence

7.2.11 Control Schematic

Control schematic diagram with a mechanical governor and complete conventional relay logic for a small hydro power house consisting of 2 x 650 kW units directly connected to 33 kV transformers as per single line attaché as fig. 2.11.1 is shown in fig. 2.11.2 to 2.11.7.

7.2.12 Control Systems foe Small Hydro Power Plant

Integrated governor and plant control system for small hydro power plants is normally adopted for small hydro plants. For micro hydels electronic load controller (ELC) systems are adopted. Lecture notes given to the Participants of the International Course on "Planning, technology Selection and Implementation of Small Hydro Power Projects" in Feb. 2001 at AHEC is enclosed as Annexure – 1.

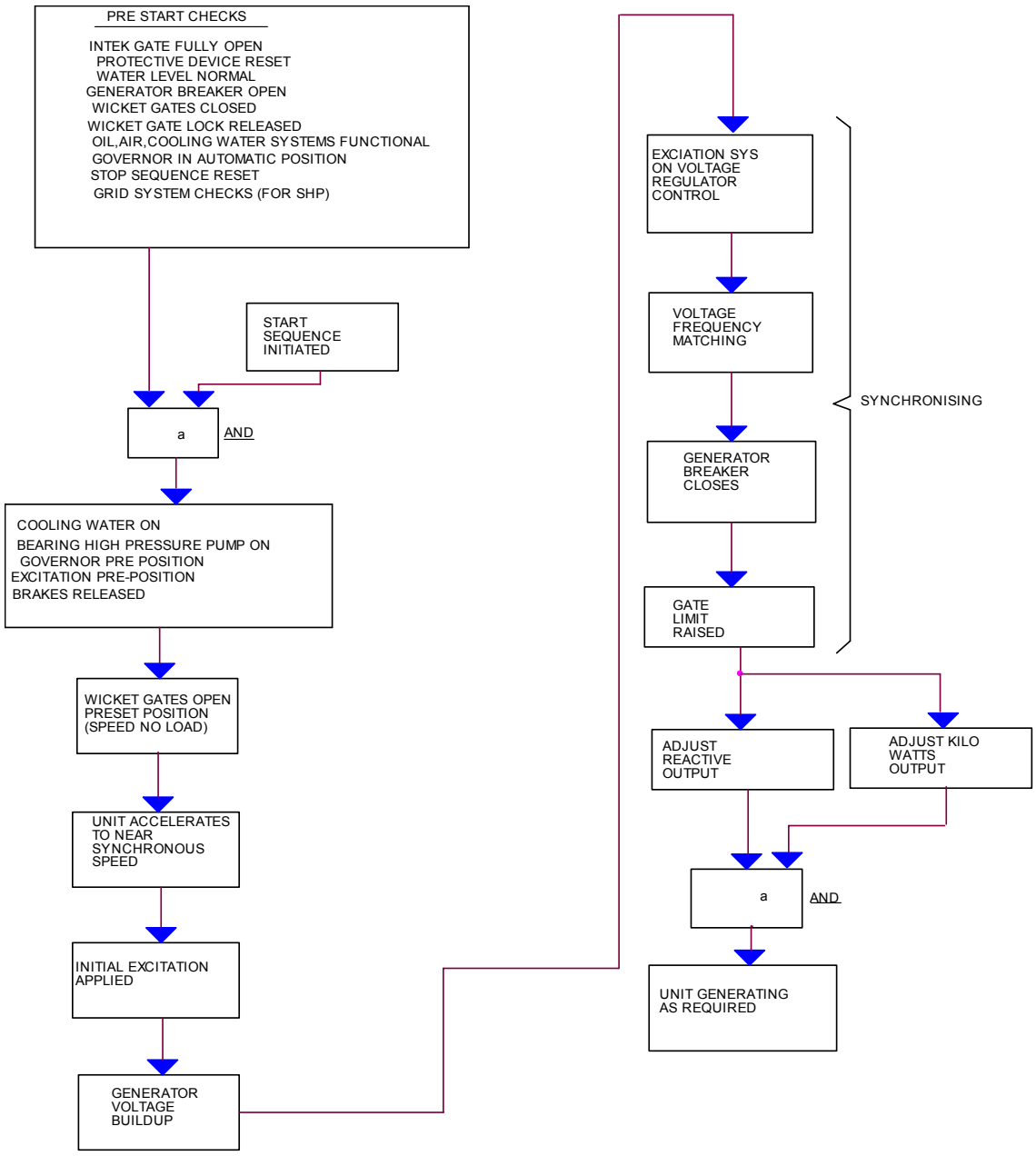

Fig. 7.2.10.1 Typical Start Sequence for Synchronous Generator (Francis Turbine)

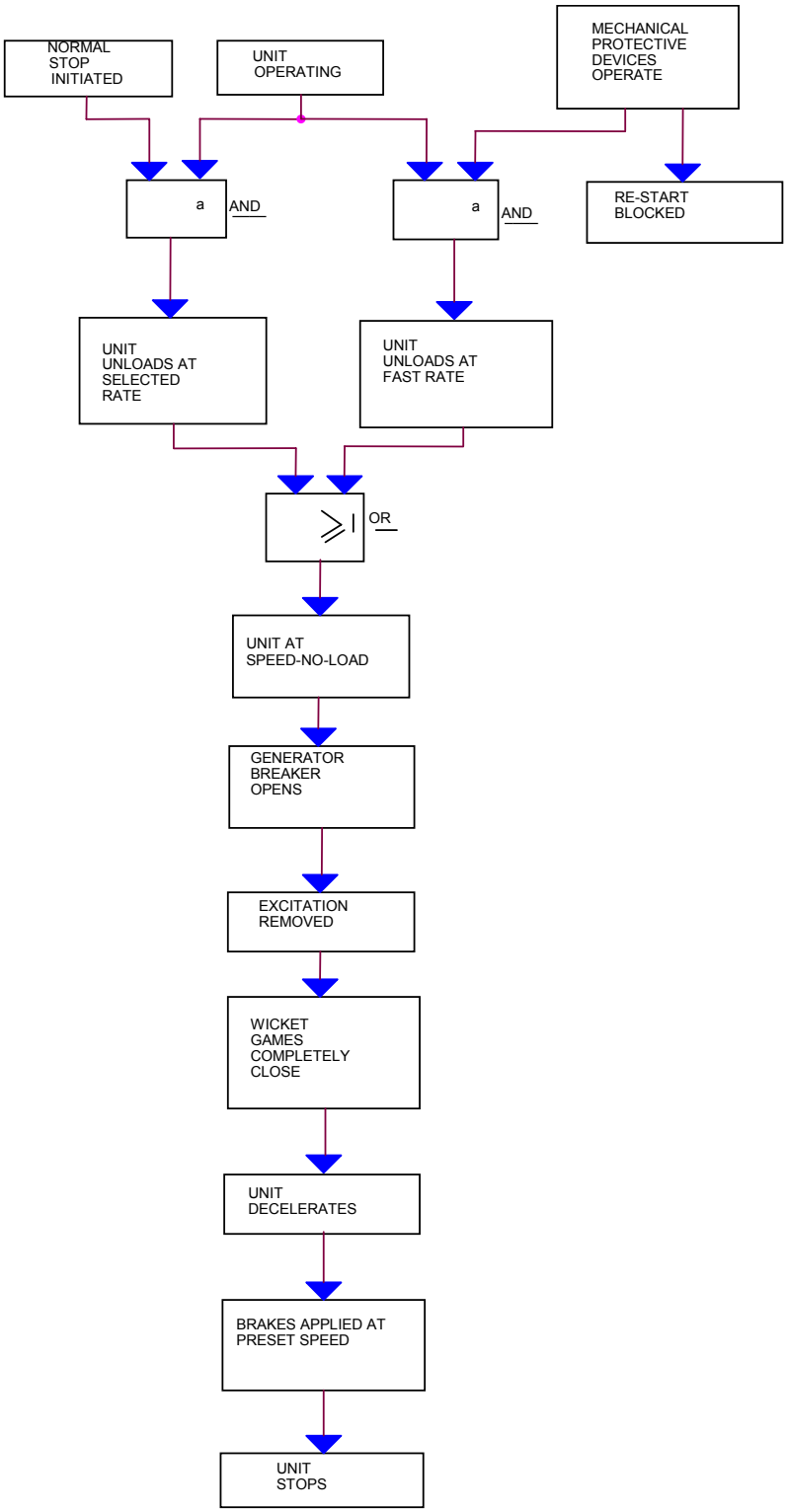

Fig. 7.2.10.2 Typical Normal Stop and Partial Shut Down Sequence for Synchronous Generator

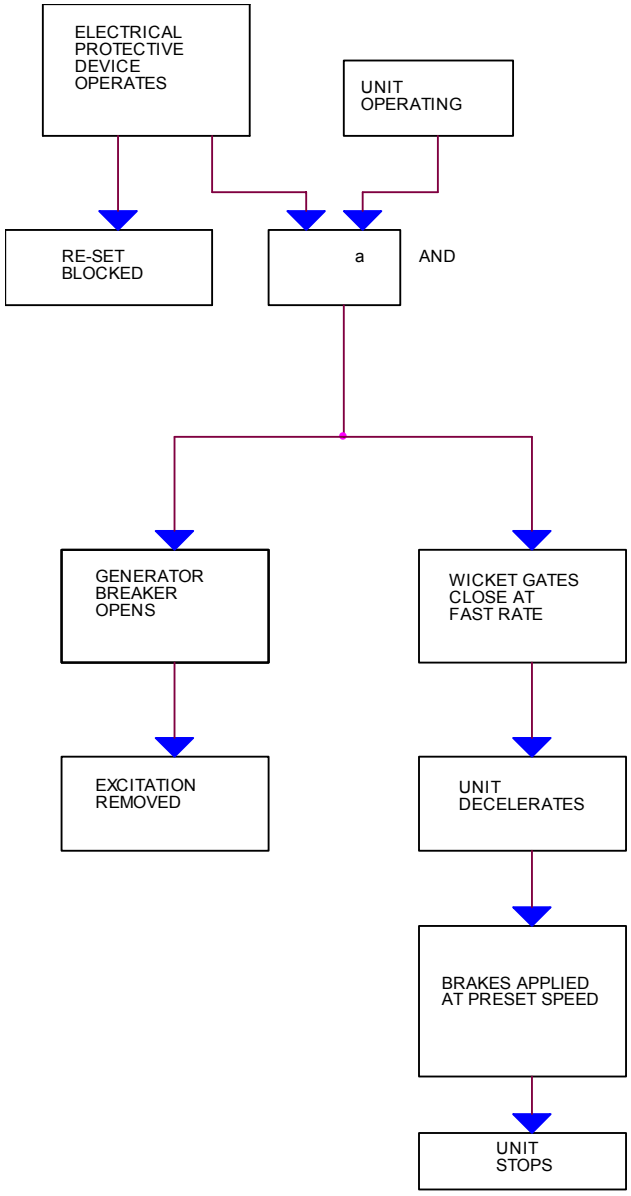

Fig. 7.2.10.3 Typical Electrical Trouble (emergency) Stop Sequence

Annexure 7.2.1

Automatic Control Scheme with Woodward Mechanical Governor

Automatic Control Scheme with Woodward Mechanical Governor for Kulabagh 2 x 600 kW impulse high turbines coupled to synchronous generator. The scheme was designed for automatic control. The equipment comprise of an inlet valve control for opening (after balancing water pressure) by oil pressure. The schematic drawing is shows in figure 1 (Annex. 7.2.1) control power 230V AC.

Turbine control is by 2 small fractional horse power motor for speed (level control) i.e. gate at speed no load and gate limit control. Load sharing is by permanent speed droop setting. The schematic is shown in fig. 2 (Annex. 7.2.1) for speed adjustment (speed level control) and fig. 3 (Annex. 7.2.1) for gate limit control.

Auto synchronizing is shown in fig. 4 (Annex. 7.2.1). Manual synchronism facility is also provided. The drawing also shows main Single Line Diagram.

Gov. oil pump control for servomotor is shown in figure 5 (Annex. 7.2.1). Pl. note that normally two …… are provided.

Annunciation and alarm is shown in figure 6 (Annex. 7.2.1).

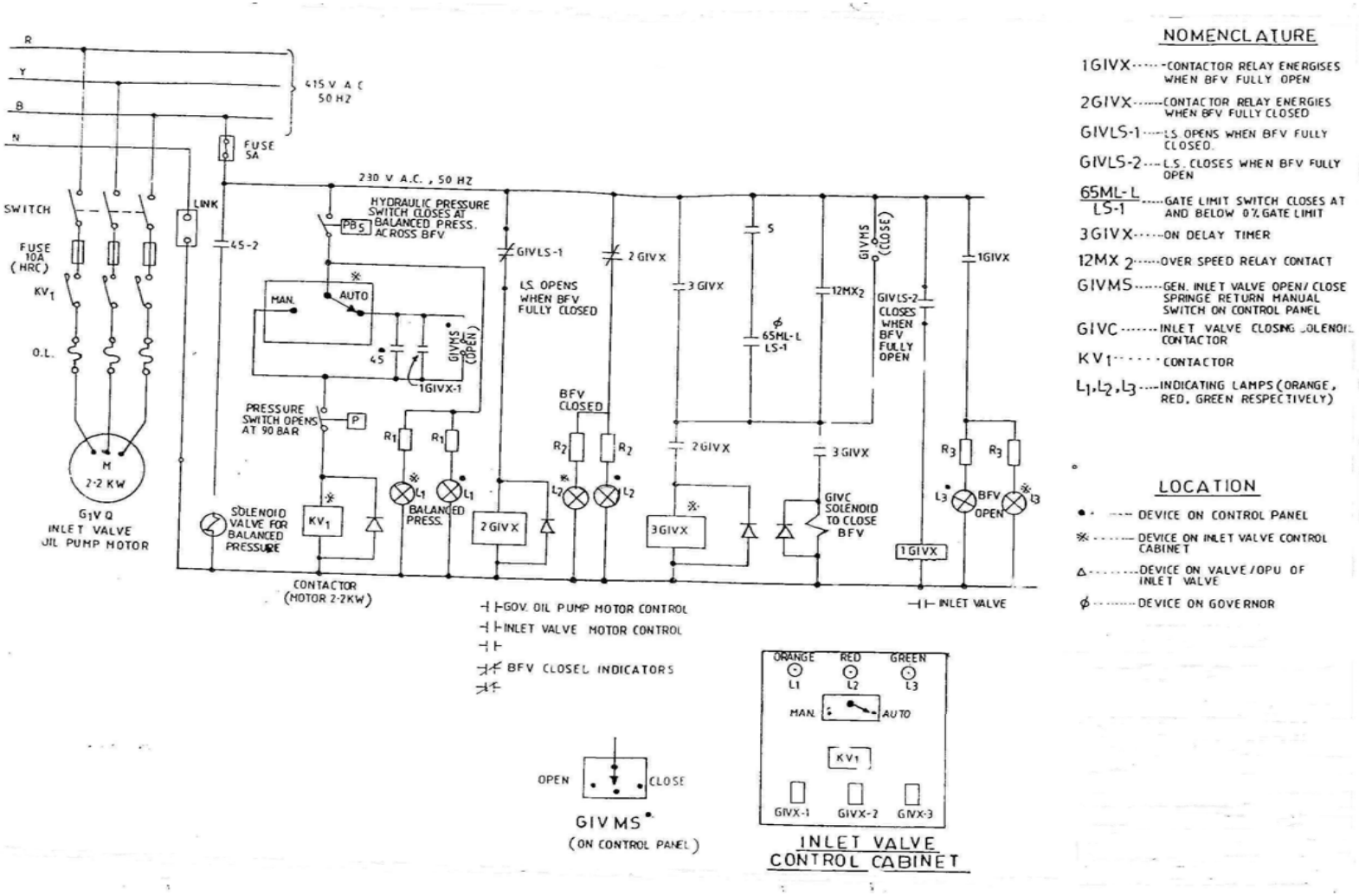

Fig. 1 (Annex. 7.2.1) Automatic Unit Control
Inlet Valve Control

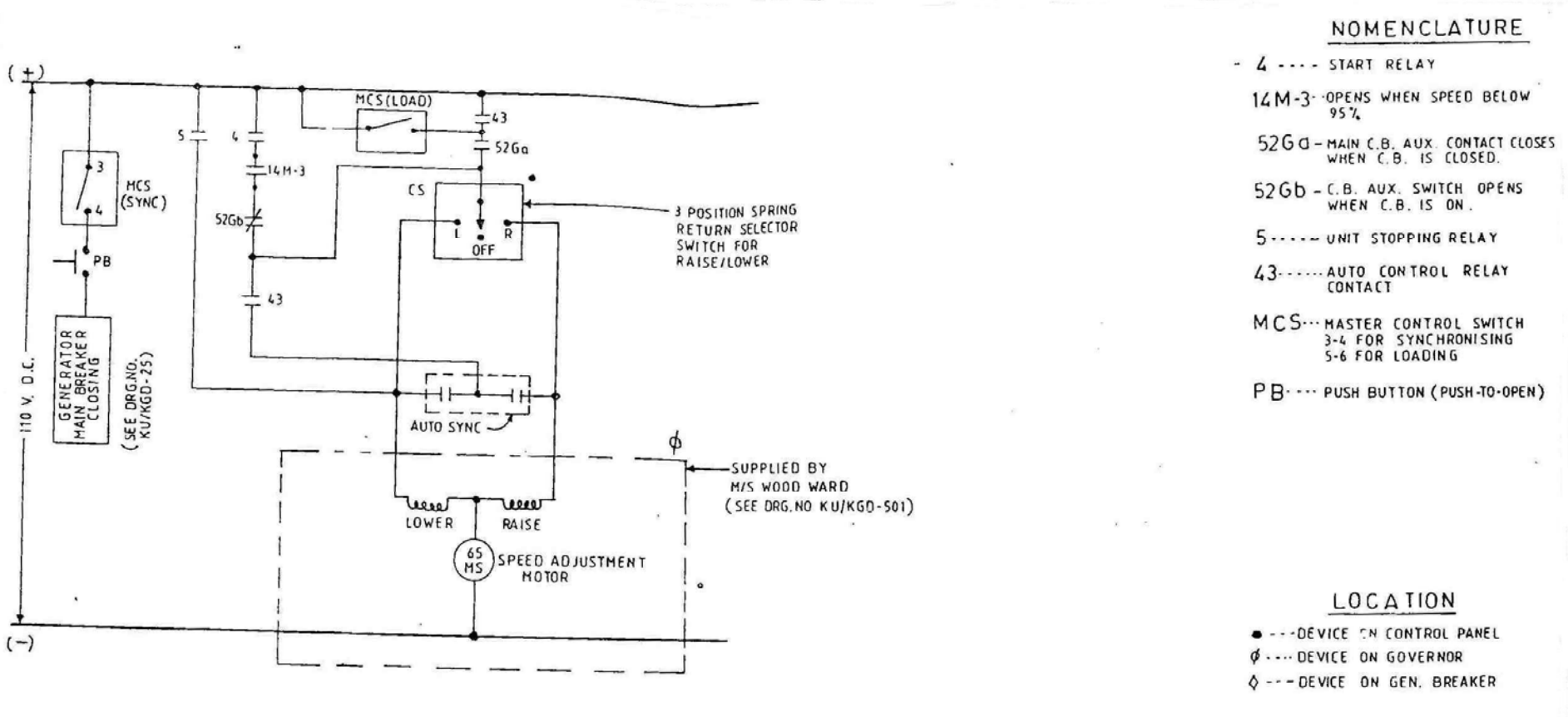

Fig. 2 (Annex. 7.2.1) Mechanical governor automatic unit control
Turbine control (speed adjustment)

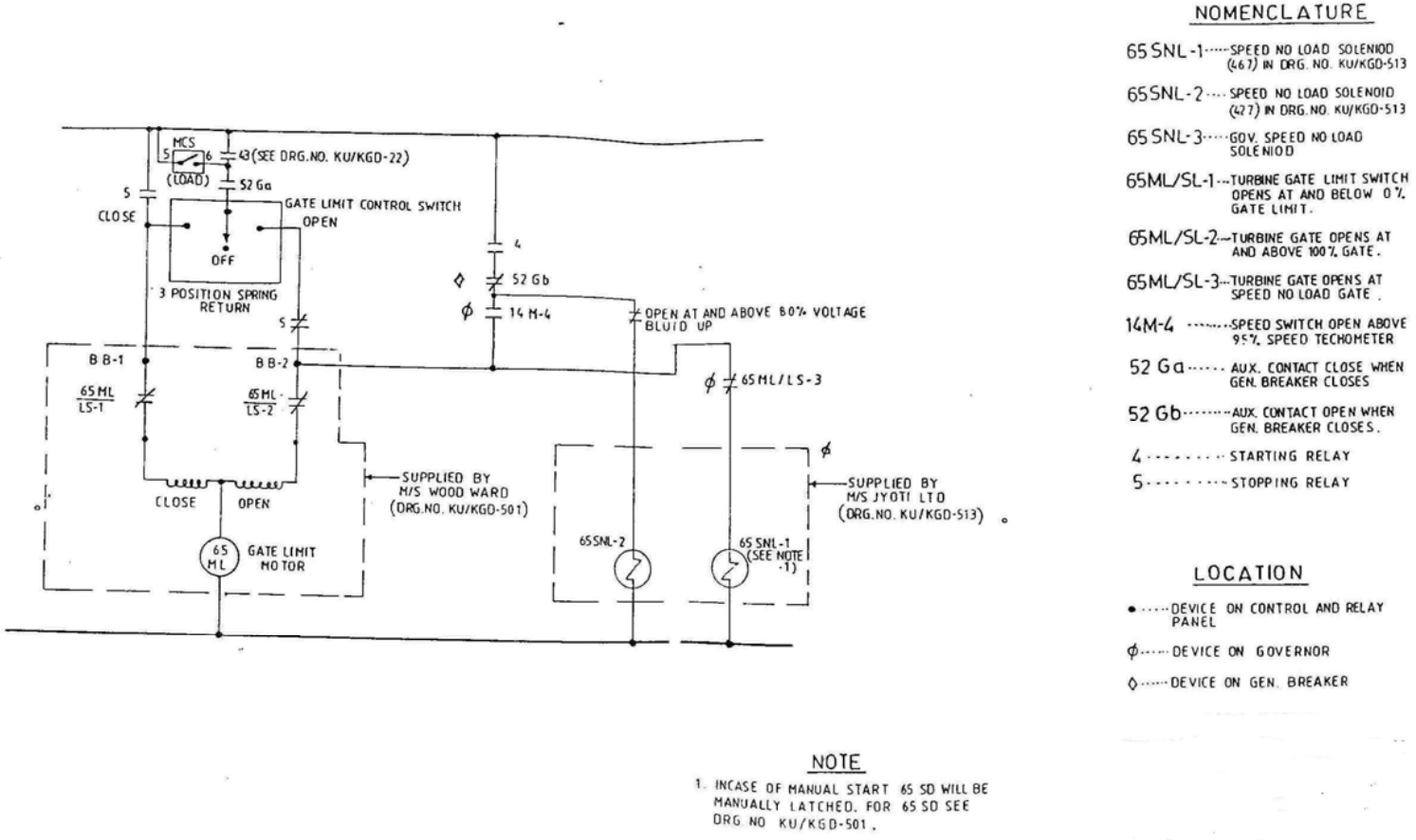

Fig. 3 (Annex. 7.2.1) Automatic Unit Control Mechanical Governor

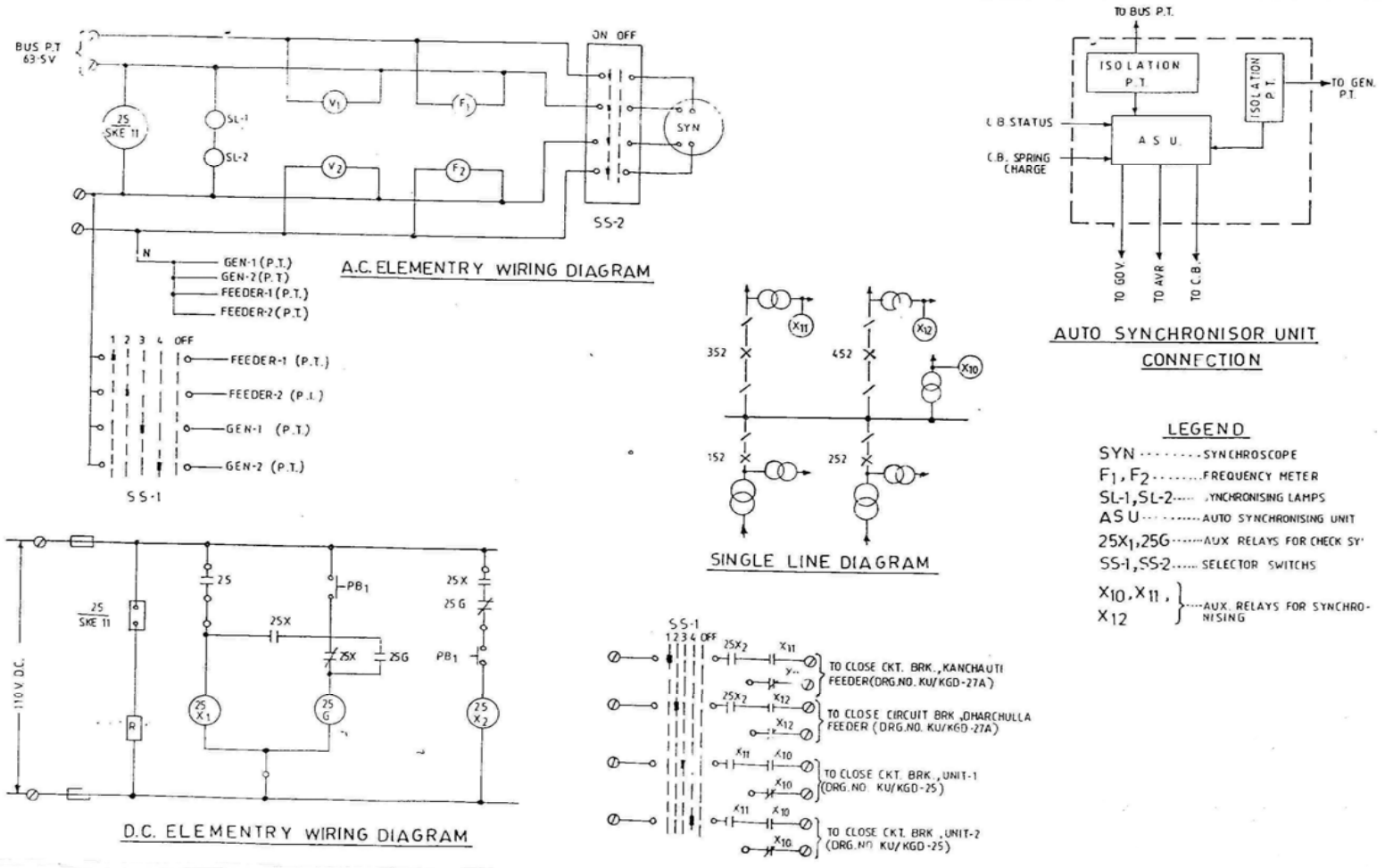

Fig. 4 (Annex. 7.2.1) Automatic Unit Control Synchronising Panel

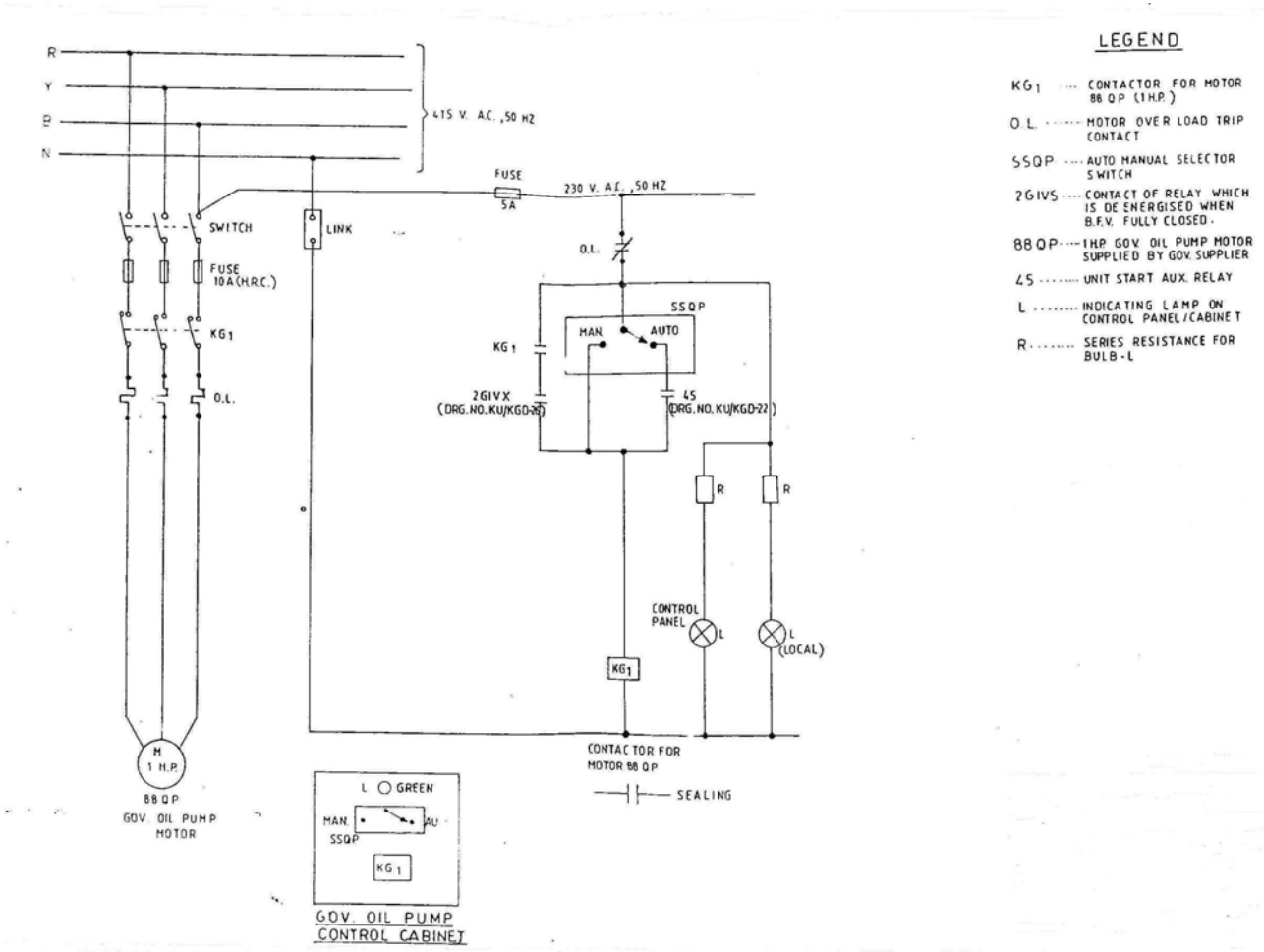

Fig. 5 (Annex. 7.2.1) Automatic Unit Control
Gov. Oil Pump Control

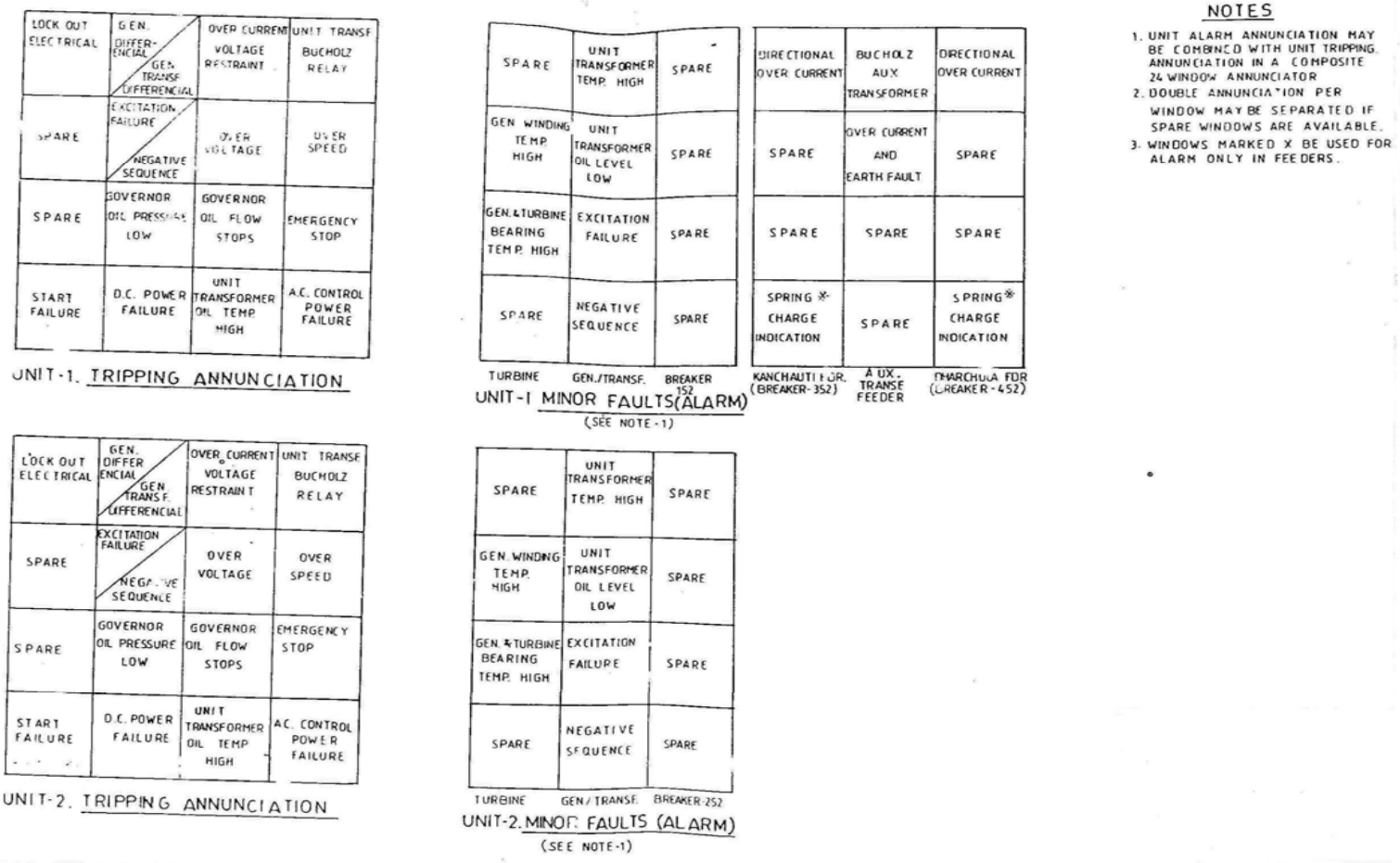

Fig. 6 (Annex. 7.2.1) Automatic Unit Control Annunciation Schedule

Annexure –7.2.2

INTEGRATED GOVERNING AND PLANT CONTROL SYSTEM FOR SMALL HYDRO PLANTS

1.0 INTRODUCTION

There are many functions to be performed in a small hydro power system. Here, the term turbine governor is used to cover speed control of the turbines themselves, plant automation is used to cover such operations as auto start, auto synchronization, remote control start up or water level control, and data acquisition and retrieval is used to cover such operations as relaying plant operating status, instantaneous system efficiency, or monthly plant factor, to the operators and managers.

From the 1920s until the 1970s, control of a hydro plant's generating units was typically performed from a unit control switchboard (UCS), or, if the plant had multiple units, from a plant control switchboard (PCS). The UCS and PCS switchbaords contained iron vane meters, hardwired control switches, and hundreds of auxiliary relays to perform the unit start/stop operations. All the necessary sensors and controls required to operate the unit or units were hardwired to the UCS or PCS, allowing a single operator to control the entire station from one location. Although modern systems still permit control of the entire plant from a single location, the UCS is nor longer hardwired to each individual field component. Modern control rooms utilize the far more cost-effective supervisory control and data acquisition (SCADA) systems (including programmable logic controllers (PLCs) and distributed computer control systems (DCSs)) with graphic display screens to implement a vast array of control schemes. The SCADA control scheme also provides flexibility in control, alarming, sequence of events recording, and remote communication that was not possible with the hardwired control systems.

2.0 CONSIDERATIONS FOR SELECTING GOVERNOR AND CONTROL SYSTEM

Governor and Control systems for small hydro units especially in developing countries have to be selected keeping in view the following :

(a) Traditional mechanical flow control governor with mechanical hydraulic devices is complex demanding maintenance and high first cost. Further performance requirements of stability and sensitivity i.e. dead band, dead time and dashpot time especially for interconnected units may not be met by mechanical governors.

(b) Electronic and Digital flow control governors can be take up plant control functions.

(c) Cost of speed control and automation with currently installed analog flow governors, unit control and protection systems is high. These systems require attended operation and are mostly based on large capacity hydro units. This is making most of the units very costly and uneconomical to operate.

(d) The manpower as available is unskilled and further adequate supervision is not feasible.

(e) Load factors for stand alone micro hydels are usually low affecting economic viability.

(f) Flow Control Turbine Governors are expensive and not recommended for small hydro units in micro hydel range. Electronic load control governing system with water cooled hot water tanks as ballast loads for unit size upto 100 kW be used. This will make a saving of about 40% on capital cost Table-1. The generator flywheel is not required. If the thyristor control (ELC) is used then the alternator needs to be oversized upto 2%% on kVA to cope with the higher circulating current induced. Accordingly, in case of small units upto 100-150 kW size eliminator of flow control governors by use by shunt load governor (electronic load controllers) will make these units economically viable and properly designed will eliminate continuous attendance requirement.

Comparison of a 100 kW, 130 m head, 120 litres/run of the rive the river system using either ELC or Flow control governing system (Ref. 4.)

ITEM	**Cost ELC System**	**Cost, flow Control system**	**Percentage difference**
Intake Weir	100,000	100,000	0
Settling tank system	75,000	75,000	0
Canal	400,000	400,000	0
Forebay	100,000	120,000	-20%
Penstock & anchors	850,000	1,150,000	-22%
Power House	100,000	100,000	0
Turbine & Drive	1,000,000	1,450,000	-30%
Alternator	350,000	300,000	+15%
Governor, protection & instrumentation	180,000	700,000	-76%
Construction, transport, installation	450,000	500,000	-10%
Commissioning	50,000	60,000	-20%
Sub total	3,655,000	4,955,000	

Engineering Costs (25%)	91 3,750	 1,238,750	
TOTALS	 4,568,750	 6,193,750	- 36%
Total Cost/ kW	 45,688	 61,938	

TABLE – 1

* Designed for full runaway overspeed condition

(g) Data storage function can be added to the Digital Governors.

(h) The dummy loads in the Shunt Load Governors (ELC) can be useful load system or can be used for supplying domestic energy needs.

(i) Analog Electronic Governors and plant controllers are also used for small hydro auto synchronizing and for remote control and monitoring of system. Experience in the successful operation of these system in India is so far not very good.

(j) Digital generation controllers were evolved to take care of speed control, unit control and automation, unit protection and every generation scheduling and have been successfully in operation for over ten years.

(k) PLC based system are costly but are stated to be reliable and have been in operation in India and abroad.

(l) Dedicated PC based systems for complete generation control can be easily adopted for data acquisition and storage at a nominal cost and can also be adopted to SCADA system.

3.0 U.S. PRACTICE REGARDING GOVERNOR AND CONTROL

Type of Scheme

Two basic control schemes utilized for small and medium hydro stations are (1) a single PLC with a manually operated back-up system, and (2) a redundant.

Table 1 : Advantages and Disadvantages of the Redundant PLC Control Scheme

Advantages	Disadvantages
• 100 percent backup for the central processing unit (CPU). The CPU includes the processor, system memory, and system power supply.	• Cost. The cost of a second PLC exceeds the cost of a manual backup system.
• Continued automatic control of the nit under headwater level or discharge control with one PLC out of service. This ability allows continued maximizing unit revenue when a PLC fails.	• Complexity. Most small hydro plant operators are not technically trained for troubleshooting PLCs (some of this complexity is offset by the PLC and I/O card self-diagnostics now available.
• Uniform spare parts. Only one set of I/O	Failure of both systems simultaneously.

cards needs to be maintained. Items such as spare relays and control switches associated with a hard-wired system are not required.	Although redundant PLCs do enhance system reliability, they can be prone to simultaneous failure caused by surge. Owners should insist on good surge protection engineering. • Software problems. If software is non-standard, software problems will be common to both PLCs.

Table 2: Advantages and Disadvantages of a Single PLC with Manually Operated Backup System

Advantages	Disadvantages
• Less expensive than a redundant PLC system.	• Headwater level or discharge control (if performed by the PLC) is disabled whenever the PLC is disabled. When utilizing the manually.
• Less chance of a common mode failure because the hardwired system is less prone to surge-induced failures and more tolerant of inadequate grounds.	• Operated backup system for control, the unit's output is set a the operator's discretion. An operator will usually allow a safety margin of approximately 10 percent in headwater or discharge level to avoid problems such as drawing air into the penstock. As a result, maximum possible revenue for the unit is usually not realized during manual operation.
• Operator familiarity with trouble shooting hardwired relay systems.	• Nonuniform spare parts. Spare parts would have to provided for both the PLC system and the manually operated backup system. However, it should be noted that relatively few spare parts would be needed for the manual backup system, due to its simplicity.

PLC system. There are various modifications of these two basic schemes, which depend upon the individual plant requirements and owner preference. The single PLC offers the advantages of low cost and simplicity, and is typically based up by a hardwired system. With a redundant PLC system, backup control and memory are provided by a second PLC. Advantages and disadvantages of the two schemes are summarized in Table 1 and 2.

In either unit control scheme, all unit protective relays should be independent from the programmable controllers. This independence will allow the protective relays to function even if the PLC fails, ensuring the safety of unit equipment and personnel. For the single PLC scheme with a manually operated back-up system, it is usually best to have an independent

resistance temperature detector (RTD) monitor and annunicator panel functionally operative during manual operation of the unit. These additional panels will provide the operator vital information which will facilitate operation of the plant in the manual mode.

Personnel Computers

Modern control schemes also utilise personal computers (PCs) in conjunction with PLC control systems. The PCs are utilized with man-machine interface (MMI) software for control display graphics, historical data and trend displays, computerized maintenance management systems (CMMS), and remote communication and control. In addition, the PLC programming software is usually resident on the PC, eliminating the need for a separate programming terminal implement or change the PLC software coding.

A PC also can be used for graphical displays of plant data, greatly enchancing operational control. Standard Microsoft-based graphical display software packages are available for installation on a standard PC. The software package can be utilized on the PC to create specific powerhouse graphical displays based upon real-time PLC inputs. These displays typically include control displays with select-before-execute logical, informational displays for plant RTD temperatures, or historical trending plots of headwater, tailwater, and flow data.

Modems with both dial-out and dial-in capabilities can be located in either the PLC, the PLC, or both to provide off-site access to plant information. These modems may also be utilised to control the plant operation from a remote location.

Programmable Logic Controller (PLC) type plant controllers with a manually operated back up system combined with PC based SCADA system are used as Governors and for Plant control and data acquisition. This makes the system costly but reliability is stated to be good and can be used for small hydro generation control. It is considered that dedicated digital control systems which is digital P.C. based can perform all functions of governing, unit control and protection as well as for data storage and can be more economical, dependable and are being manufactured in U.S.A., Europe, India and countries. These dedicated systems with back up manual control facility of speed control in emergency by dedicated semi automatic digital controllers can be an option and is also recommended for UNDP-GEF projects in India.

Monitoring and control and data acquisition system (SCADA system) can be a part of the P.C. based digital governor and generation control equipment. Provision of data storage of one month with 16 MB of Ram memory and a 540 to 850 MB Hard Drive as part of the PC based governing and control system should be provided. This data could be retrieved on a floppy drive after one month for examination. As the communication links develop the data can also be transmitted via a Modem to a remote point for examination and supervisory control.

4.0 ELECTRICAL PROTECTION

Protective relays systems comprising of the following relays for synchronous generator under 1500 kW is considered adequate protection and also recommended by U.S. consultants for UNDP-GEF small hydro project.

*	50/51 V	Time over current with instantaneous trip
*	32	Reverse power
*	46	Current unbalance
*	51G	Ground over current
*	40	Excitation field protection
*	49T	Winding and bearing over-temperature

Further it is also practice in U.S. that the protective relays need not be utility grade because utility grade relays are providing quite expensive. Industrial grade protective relays or electrical protection provided as a part of the digital control system is adequate with a conventional utility grade overcurrent back up protection.

5.0 AUXILIARY CONTROL

Auxiliary control should form a part of digital governor. It is further recommended that water jet diverters of emergency closure of inlet valves be provided to avoid overspeeding to runaway in case of generator failure emergency.

In European practice and IEC recommendations the generators are designed for continuous runaway conditions. It is considered that generators in micro hydel range be designed for runaway condition and provision of emergency closure as stipulated above be done away with.

6.0 MODERN TYPICAL DIGITAL SHUNT LOAD GOVERNOR FOR MICROHYDELS

A typical Digital Shunt Load Governors (ELC) developed in India is shown in Fig.1 (Reg.2.). These controllers are reported to be working successfully in India and abroad for last seven years. These Generation Controllers (load shunt governors) are Digitally controlled electronic governors for controlling Micro Hydel power plants (upto 150 kW) by controlling the output load only.

Standard controllable loads (like water heaters) are provided alongwith the governor system and the load on the machine is maintained using these load in such a way so that user gets stable voltage and frequency. No major input control is required resulting in considerable saving in cost of equipment and civil works. Dummy load can be replaced by useful loads. Load controller can be designed to manage the useful load system for surplus energy. It is fool proof and suitable especially for unattended operation in remote Rural Area of developing countries by unskilled operators.

6.1 Advantage of Shunt Load Governors

The generator always generates the maximum power possible. The generation not immediately required is used up in secondary loads that are controlled by TRIACS. The secondary loads can be for useful purposes and the overall system efficiency can be extremely high. Other advantages are as follows :

i. Since the control is by digital means with speed as reference the response of the governor to changes in frequency can be faster and more accurate as compared to the

mechanical of governing. Or by electronic governing based on current / voltage as reference.

ii. Governing by control of water is complicated by the effects of water hammer. Water hammer results from having to accelerate and decelerate the moving water in the power plant and penstock in order to vary the flow through the turbine. Faster governing (for stability) can increase water hammer pressures. Water hammer induced pressure fluctuations create governing difficulties if not corrected for. Water hammer problems are reduced in large hydro-power plants by keeping the length of the pipeline as short as possible or by reducing the speed of operation of the governor (possible only if the loads change slowly enough) or by installing surge tanks to absorb the impact of flow changes. If the governing is done by load control, no quick changes are necessary.

iii. No moving parts: Mechanical governing requires relatively fast and accurate mechanical movement. These devices necessary to control water add to the turbine expense.

iv. Less expensive types of turbines having no provision for flow control of water can be used. Industrial Centrifugal pumps for example, can be applied as low cost turbines by operating them backwards but pumps do not have any inherent method for controlling water and must use load controller.

v. Little or no custom engineering is required, because the governing motion is not affected by site dependent characteristics such as length and size of the penstock. Provision of adjustable dead band and dash pot time in the field ensures stability of operation.

6.2 Governor Functions

Shunt load Governors can be designed to perform following jobs in a hydro-electric installation.

i. Stable speed control for all inflows

ii. Management of useful for surplus energy

iii. Prevent overloading of an hydro-electric plant in case of reduction in stream inflow. Shedding load at peak demand periods or during low water.

iv. Control and protection functions as described in a subsequent paragraph.

6.3 Architectural View and Hardware Details of Controller

The system is controlled by an 8 bit microprocessor running a real time operation system. The processor is interfaced to a Digital Input Output device giving a total of upto 24 digital Input/Outputs. A L.E.D. / LCD display is interfaced through the input/output device. The input output device and clock timer controls the dummy load (five step loads and one variable load) through a Triacs module.

The step and variable load indications are shown through LEDs.

6.4 Detailed Specification

1.	Processor Type	:	8 bit
2.	EPROM	:	8 K
3.	RAM	:	8 K
4.	Digital Input/Output Lines	:	24
5.	Display	:	Frequency (LED or LCD)
6.	Power Supply	:	Built in from 230 V
7.	Frequency input	:	From 230 V single phase
8.	Output	:	3 Phase or single phase
9.	Protection	:	Over frequency, over voltage, under voltage, overcurrent etc.
10.	Control	:	Start/Stop/Emergency shut down.

6.5 Triacs

The triacs load (variable internal load) can typically change from zero load (or vice versa) in 3 cycle (50 miliseconds) for normal frequency changes. Step load can be switched on directly by triacs (single phase) or by energising coil or Power Contractors. Operating Time of Contractors is 25 miliseconds and electrical life is of 1 million operation.

6.6 Stability

Provision of adjustable dead band and Dash pot time equivalent are necessary to ensure stability due to change of water inertia and load characteristics. Dashpot time is the adjustable time between two successive changes.

The typical shunt load governor for a 50 kW micro hydel shown in Fig.1 was recently supplied by M/s Pradeep digitek Roorkee and is having water heating system as dump load and is complete with plant control. The schematic single line drawings is shown in Fig. 2. Fig. 3 & 4 show a 100 kW shut load governor.

The digital shunt load controller can be used to control other useful loads as sub systems as shown in Fig. 5. (Ref. 3.).

6.6 Cost of Load Governor and Control System (E.L.C.)

Typical costs including wall mounting steel cabinet for E.L.C. meters, air circuit breaker with overcurrent protection, over voltage and overspeed trips, water cooled ballast

tanks etc. for indegenious make are given in Table 2. Thus costs have been taken of M/s Pradeep Digitek Pvt. Ltd., Roorkee. Residual current circuit breakers are used by PDPL to trip feeder breakers to prevent damage to life and equipment on ground faults. These costs are considerably lower as compared to imparted cost.

6.7 Parallel Operation

The units with shunt load governor can be operated in parallel amongst themselves and with grid using manual speed control (Phase control by Trac). Example are shown in Figure 6 to 9 from 2 no. 200 MW + 2 No 500 MW units.

TABLE - 2

System	Cost
50 kW three phase	Rs. 150000
100 kW three phase	Rs. 200000

7.0 GENERATION CONTROLLER FOR 2 X 1000 kW (PI Governor)

A fully automatic digitally controller flow control generation controller designed for 2 x 1000 kW Grid connected Small Hydro Power House in New Zealand by PDPL is shown in Fig. 4. The power house has single nozzle Impulse wheel turbine. Nozzle spears are operated by electric actuators. This digital governor controls both the units automatically (Nozzle control for flow of water) with water level changes for specific peak and off peak duty including automatic starting and stopping of the machines. The controller also provides generation scheduling as peak load for peak load optimisation. The control block diagram is shown in Fig. 10.

8.0 PID GOVERNOR

FOR LARGER AND MORE IMPORTANT SMALL HYDROS a PID flow control governor. The PDPL PC based governor is controlled by 32 bit Microprocessor. Complete generation control with customised software. Automated preprogrammed micro computer based system that dispenses with all the control functions required by a hydro power plant. The functions include :-

- Governor Speed control
- Automatic sequencing for start up and shutdown including synchronizing
- Automatic sequencing for emergency shutdown
- Data recording and reporting
- Alarm enunciators
- Full remote control and monitoring
- Control via terminal keyboard
- Water level control

- Flexible architecture
- Modular card system
- Modular card system
- Ability to communicate with other microprocessor based equipment
- Alarm and status logging
- Data logging at user selected intervals
- Event recording
- Line protection – frequency and voltage
- Generator protection – voltage, current, reverse power, differential, loss of field.

A typical diagram is shown in Fig. 11 and the V.D.T. screen is shown in Fig. 12 and start stop single line is shown in Fig.13.

REFERENCES

1. Mini Hydro Power Group (European Consultants), 1996. Guidelines for the design of civil work and selection of equipment for UNDP-GEF Hilly Hydro Project, India.

2. Literature supplied by Pradeep Digitek PVT. LTD. P.O. Box 67 Roorkee for Digital Governors.

3. Thapar, O.D. 1995. Technology for economic development;

4. Thapar, Rakesh et.al., 1986 "Microprocessor Controller for a small hydroelectric System", I.E.E.

5. Thapar, O.D. 1996. – Microprocessor control for modernising existing hydro stations. Insitutition of Engineers (India) XII National Convention of Electrical Engineers, Chandigargh.

6. Thapar, O.D. et.al.,, 1997 – New Economic Small Hydro System. First International Conference – Renewable Energy – Small Hydro. Hyderabad (India).

7. "IEEE Guide for Control of Small Hydroelectric Plants", ANSI/IEEE Standard 1020, American National Standards Institute (ANSI)/Institute of Electrical and Electronics Engineers (IEEE), 1990.

8. "IEEE Guide for Control of Hydroelectric Powerplants," ANSI/IEEE Standard 1010, ANSI/IEEE, 1991.

9. "IEEE Recommended Practice for Protection and Coordination of Industrial and Commercial Power Systems," ANSI/IEEE Standard 242, ANSI/IEEE, 1986.

10. Vadari, Subramian, Dennis Harding, and Larry Doughlas, "Open Systems for the Electric Utility Industry: What, Why, and How?" IEEE Transactions, No. 0-7803-1301-1, 1993.

11. "Communication Protocols," IEEE Tutorial Course 95-TP-103, IEEE Press, New York, NY, February, 1995.

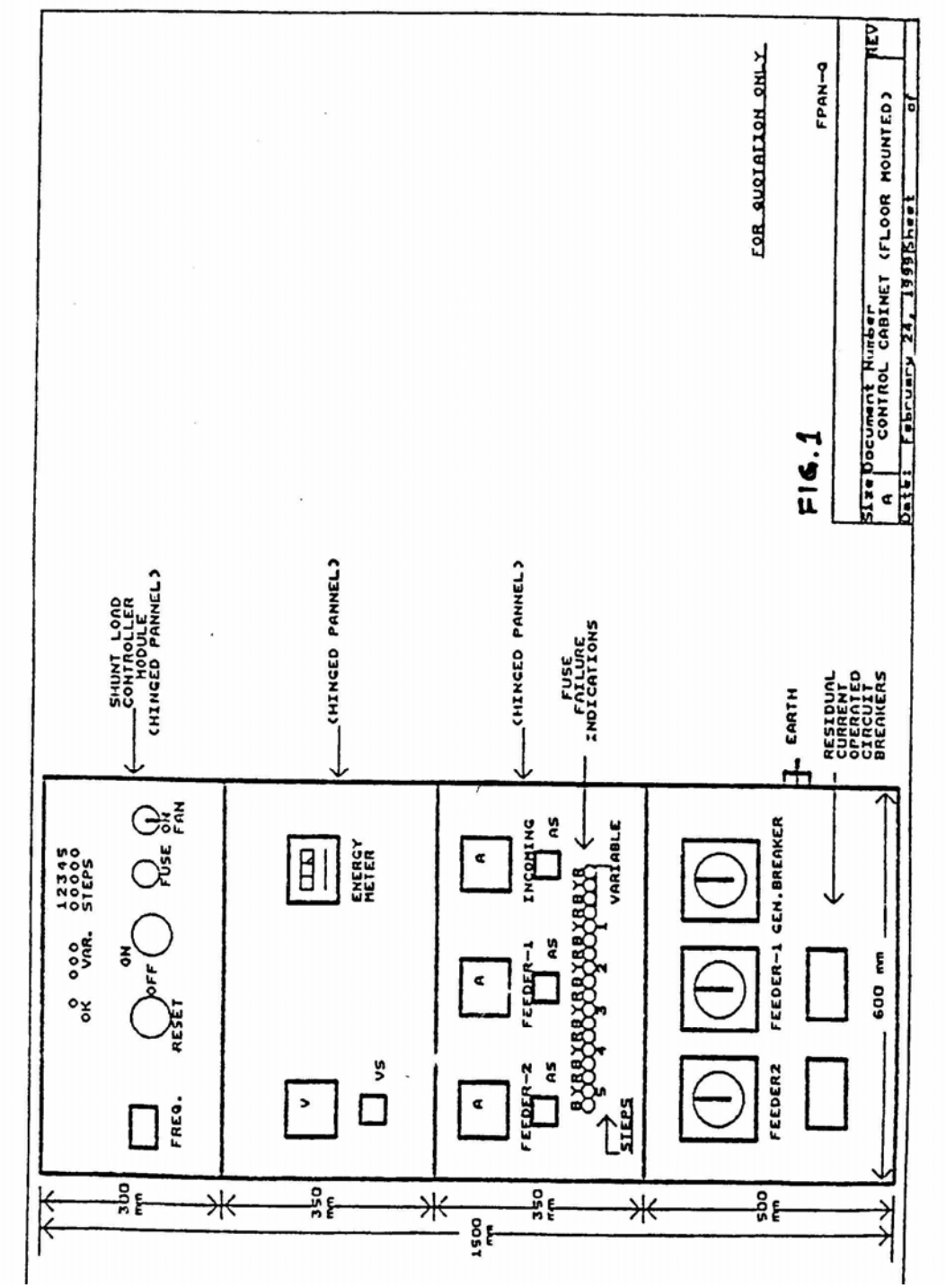

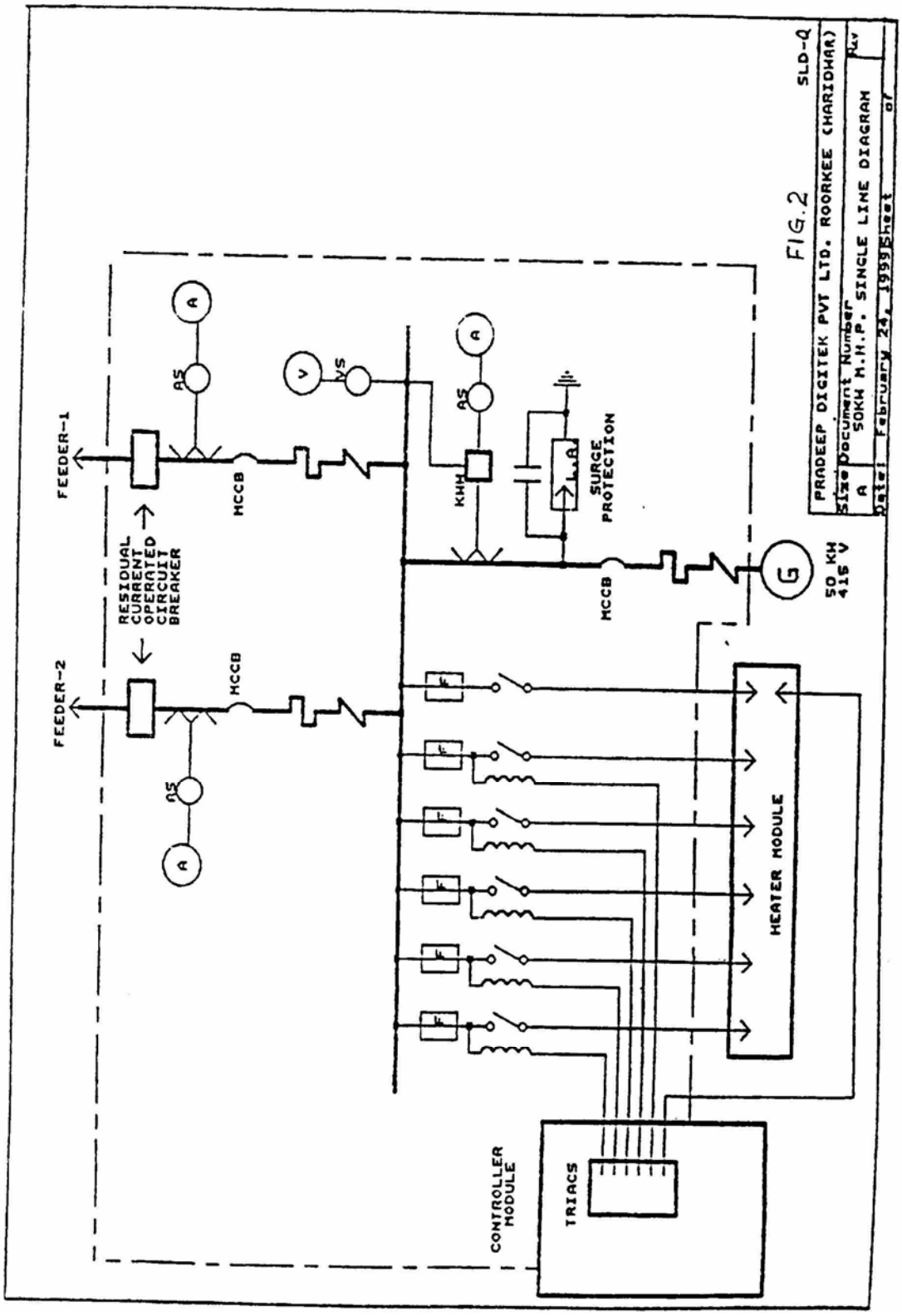
FIG.2
SLD-Q
PRADEEP DIGITEK PVT LTD. ROORKEE (HARIDWAR)
Size Document Number
A 50KW H.H.P. SINGLE LINE DIAGRAM
Date: February 24, 1999 Sheet of
FEEDER-1
FEEDER-2
RESIDUAL CURRENT OPERATED CIRCUIT BREAKER
MCCB
KWH
SURGE PROTECTION
L.A
50 KW 415 V
HEATER MODULE
CONTROLLER MODULE
TRIACS

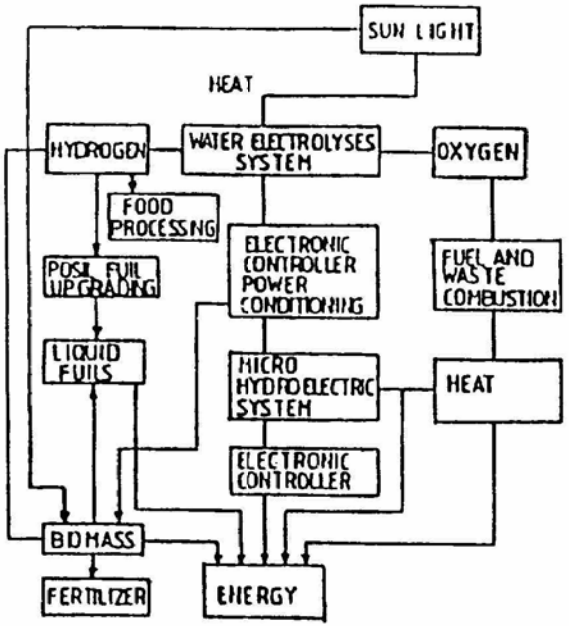

FIG.5(a) HYBRID SYSTEM (TYPICAL) (REF. 2)

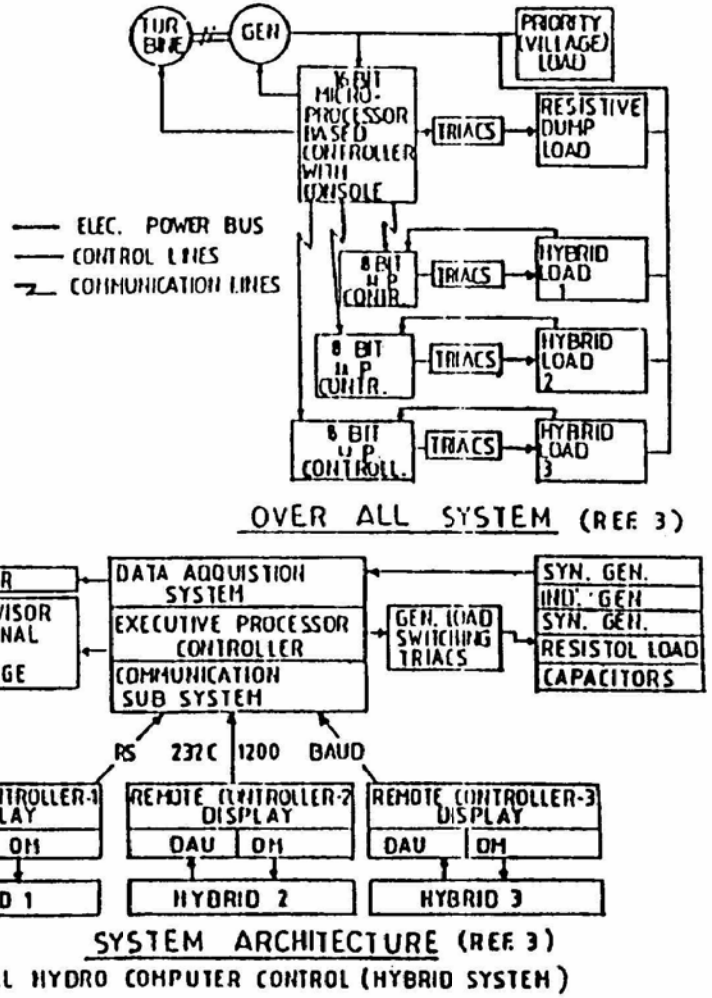

FIG.5(b) SMALL HYDRO COMPUTER CONTROL (HYBRID SYSTEM)

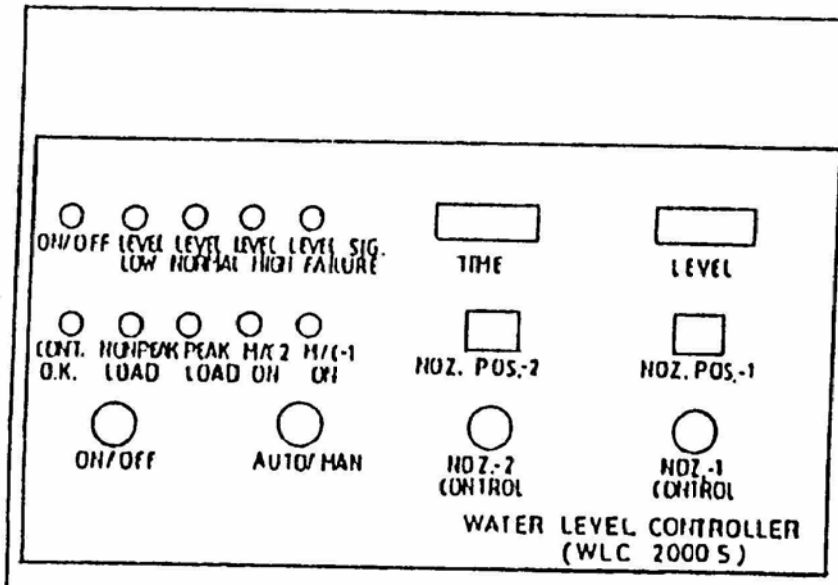

2×1000KW CONTROLLER (NEWZEALAND P. H.)

FIGURE -10 (a)

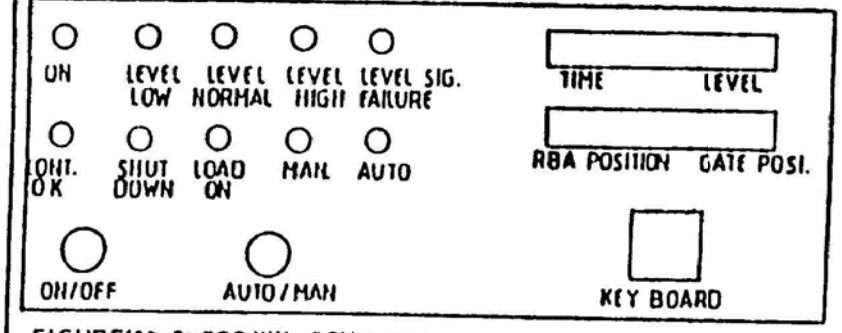

FIGURE 10(b) 2×500 KW CONTROLLER (SATPURA PROJECT)

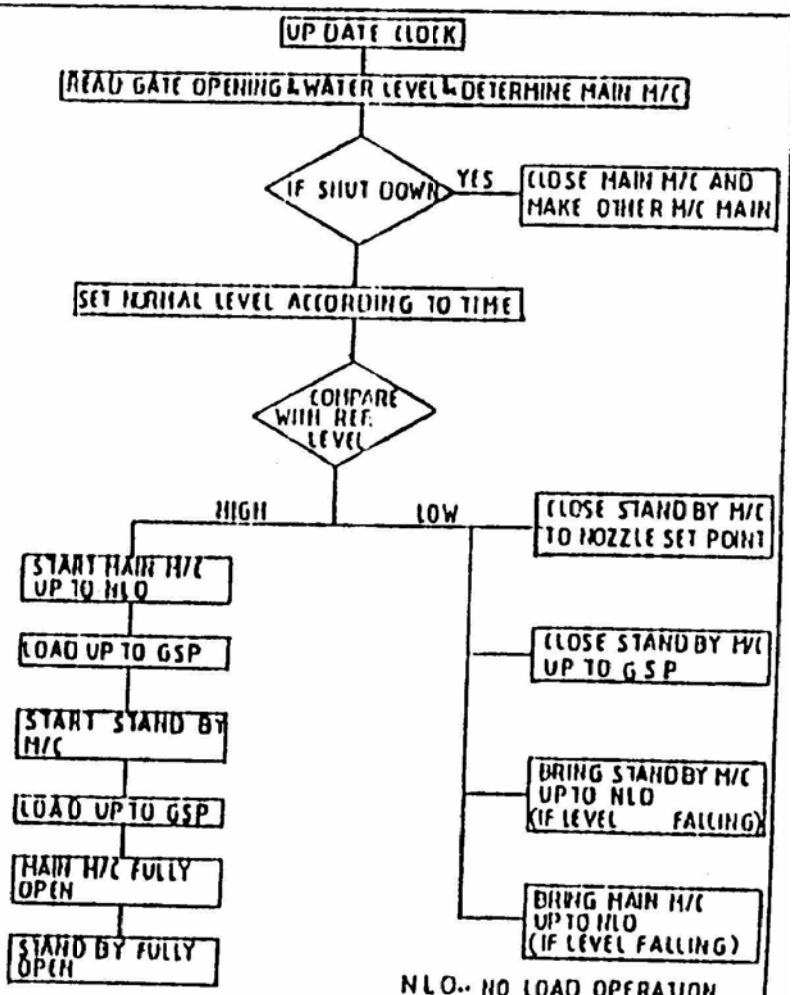

FIGURE 10 - FLOW CHART, 2×1000KW NEWZEALAND PROJ.

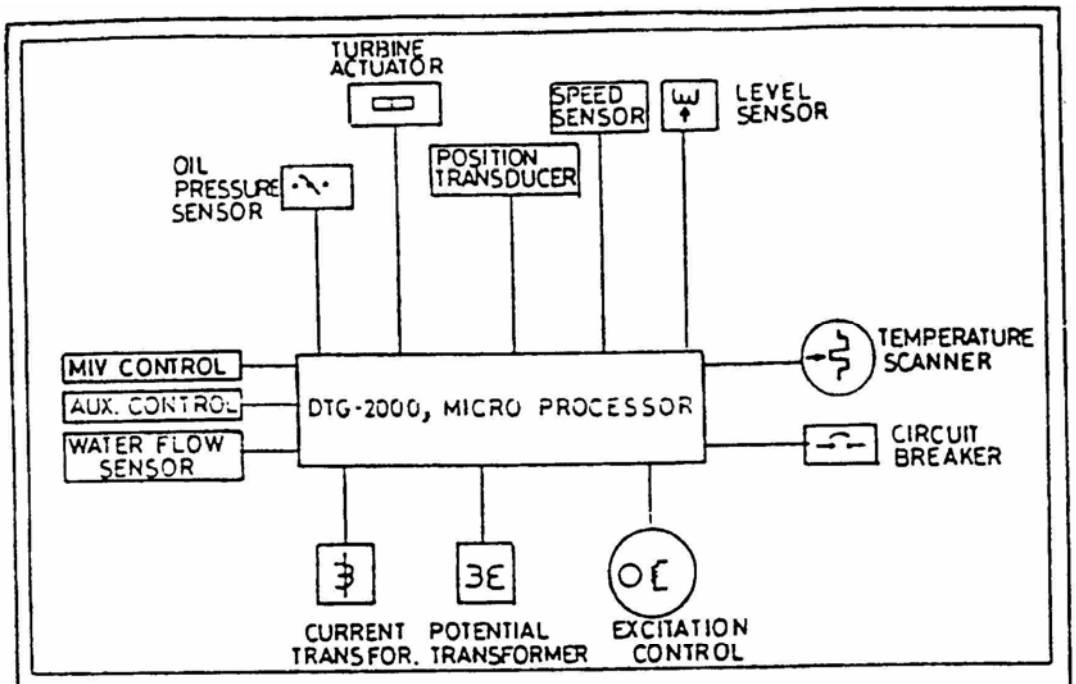

FIGURE 11

P D P L DTG - 2000

Time :: 3:6:50 Date :: 1/1/1980

Bus Voltage XXX.X V

Bus Frequency :: XXX.X Hz

Speed Adj. :: XX.X%
Speed Drp. :: XX.X%

•BRK. Gate Pos. :: XX.X %
Gate Limit :: XX.X %

Machine Mode
MANUAL
AUTO
SYNC
BRKR

Gen. Freq. :: XXX X Hz
GEN. Gen Speed :: XXX X RPM

Gen. Vol. Gen. Amps.

KW :: XXX.X
KVARS :: XXX.X
PF :: XXX.X

RY :: XXX.X V Ph. R :: XXX.X A
YB :: XXX.X V Ph. Y :: XXX.X A
BR :: XXX.X V Ph. B :: XXX.X A

Stator Temp.

SW1 : XXX.X °C
SW2 : XXX.X °C
SW3 : XXX.X °C

Bearing Temp

GB1 XXX X °C
GB2 XXX X °C
GB3 XXX X °C
GB4 XXX X °C
GB5 XXX X °C

OIL PR LOW	OIL LEV. LOW	SHUT DOWN	86 LOCK OUT	OVER SPE ED	REV POW ER	OVER CUR RENT	OVER VOLT AGE	SW1 TEMP HIGH	SW2 TEMP HIGH	SW3 TEMP HIGH	GB1 TEMP HIGH	GB2 TEMP HIGH	GB3 TEMP HIGH	GB4 TEMP HIGH	GB5 TEM HIGH

FIGURE 12

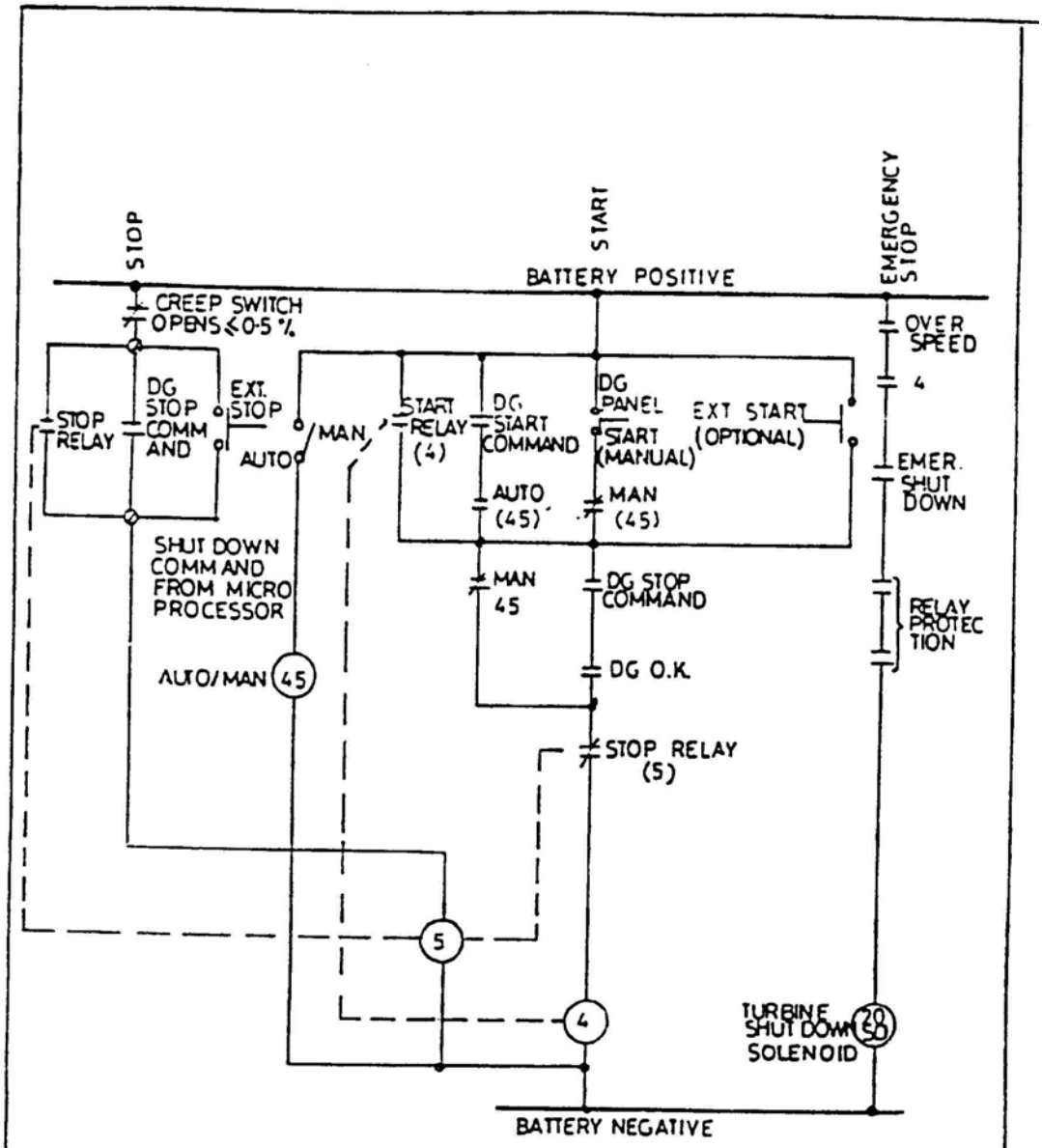

FIG. 13. START STOP SIMPLIFIED SCHEMATIC

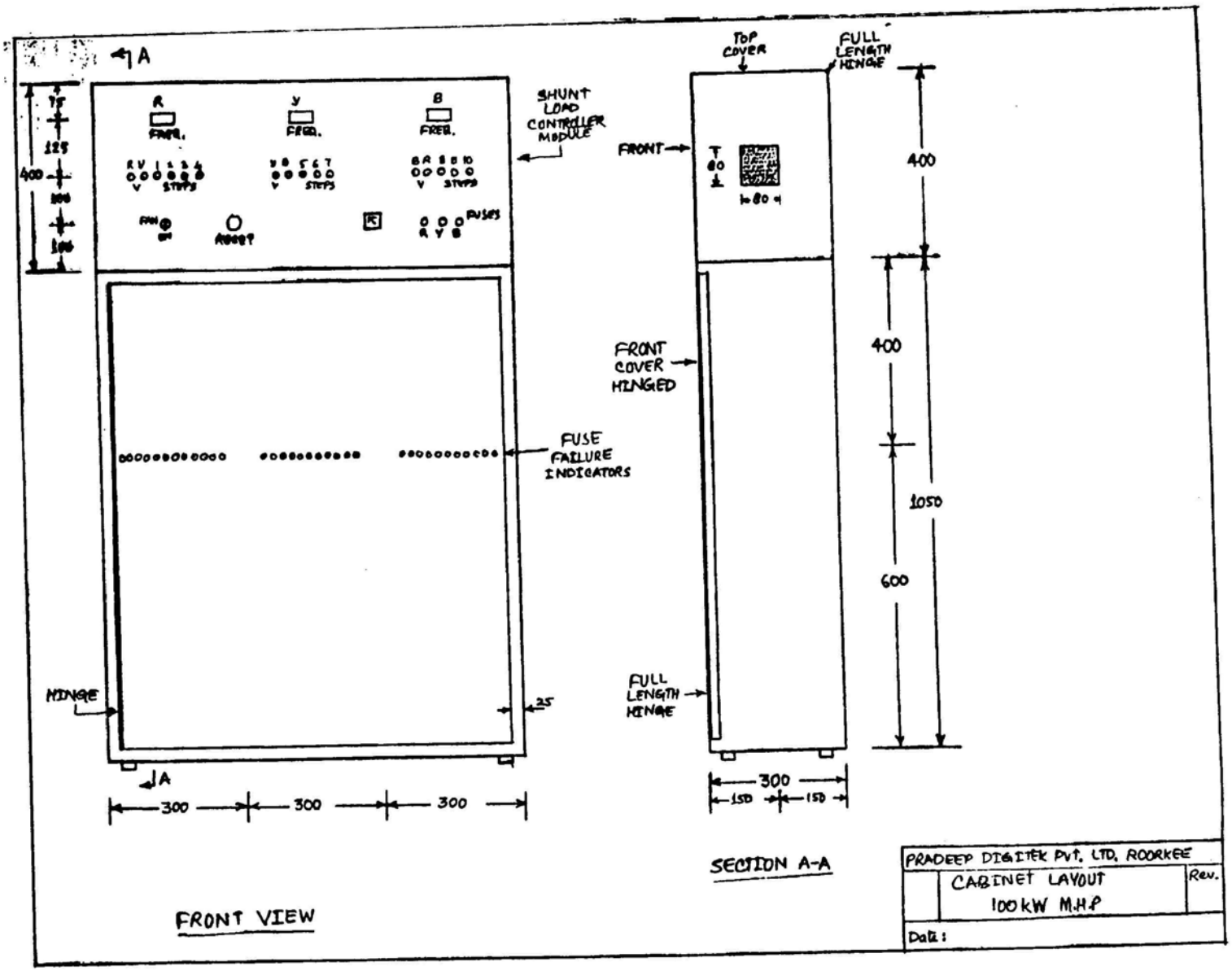
A
R
FREQ.
Y
FREQ.
B
FREQ.
SHUNT LOAD CONTROLLER MODULE
FUSES
FUSE FAILURE INDICATORS
HINGE
25
300
300
300
FRONT VIEW
TOP COVER
FULL LENGTH HINGE
FRONT
400
400
FRONT COVER HINGED
1050
600
FULL LENGTH HINGE
300
150
150
SECTION A-A
PRADEEP DIGITEK PVT. LTD. ROORKEE
CABINET LAYOUT
100 kW M.H.P
Rev.
Date:

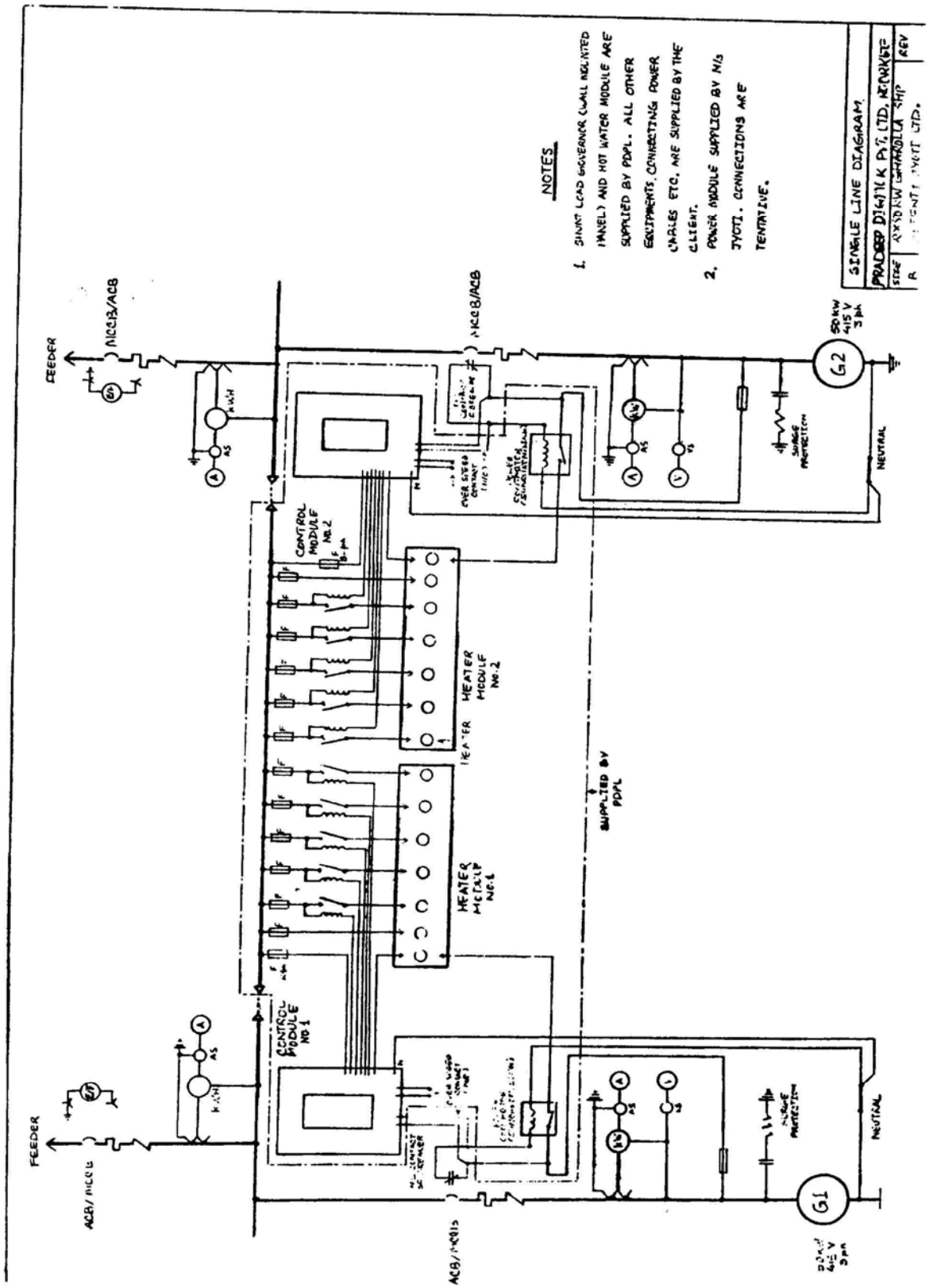
NOTES
1. SHUNT LOAD GOVERNOR (WALL MOUNTED PANEL) AND HOT WATER MODULE ARE SUPPLIED BY PDPL. ALL OTHER EQUIPMENTS, CONNECTING POWER CABLES ETC. ARE SUPPLIED BY THE CLIENT.
2. POWER MODULE SUPPLIED BY M/S JYOTI. CONNECTIONS ARE TENTATIVE.
SINGLE LINE DIAGRAM
FEEDER
FEEDER
CONTROL MODULE NO.2
CONTROL MODULE NO.1
HEATER MODULE NO.2
HEATER MODULE NO.1
SUPPLIED BY PDPL
NEUTRAL
NEUTRAL
G1
G2
50 KW 415 V 3 ph

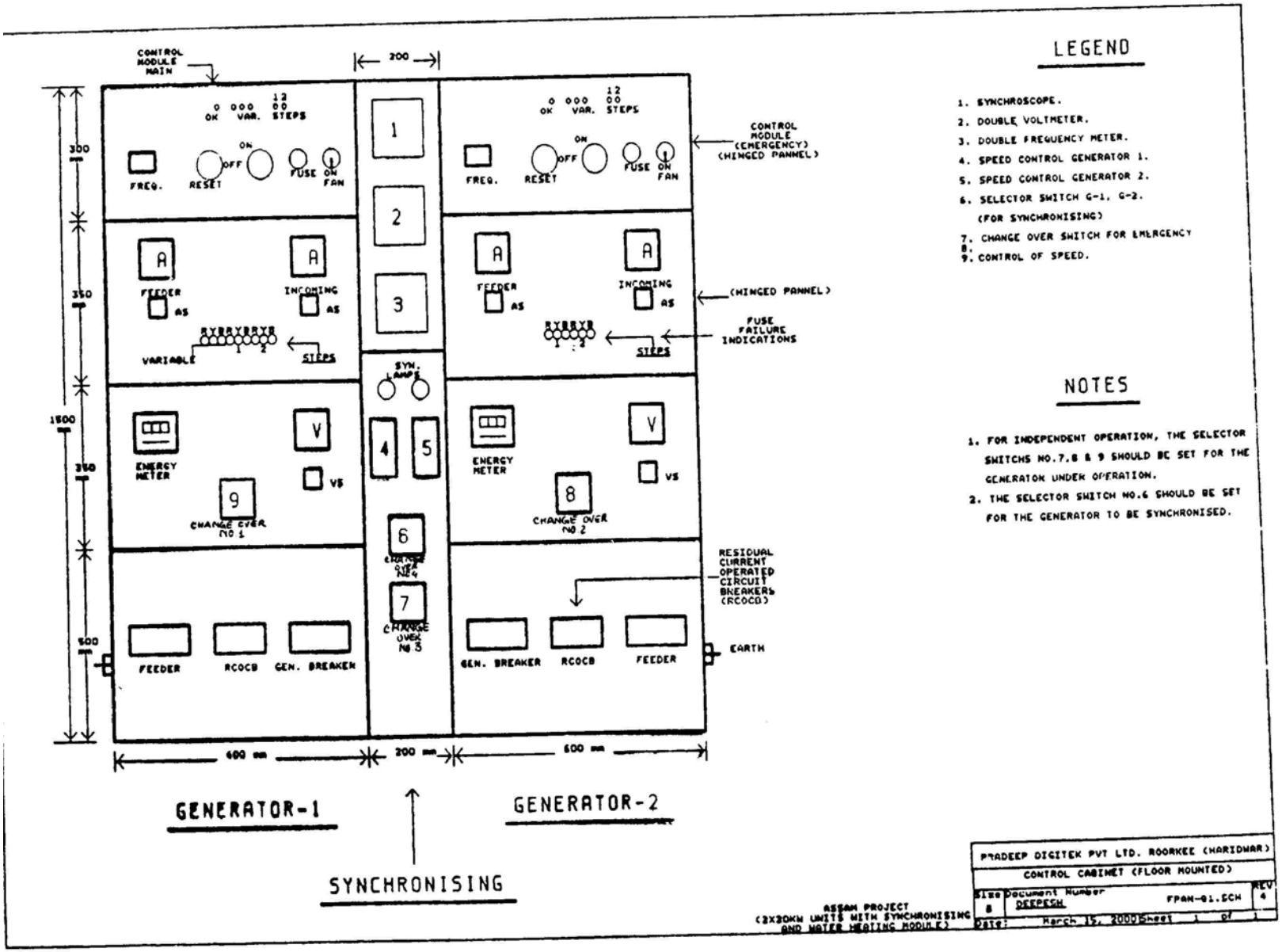

LEGEND

1. SYNCHROSCOPE.
2. DOUBLE VOLTMETER.
3. DOUBLE FREQUENCY METER.
4. SPEED CONTROL GENERATOR 1.
5. SPEED CONTROL GENERATOR 2.
6. SELECTOR SWITCH G-1, G-2. (FOR SYNCHRONISING)
7. CHANGE OVER SWITCH FOR EMERGENCY
8.
9. CONTROL OF SPEED.

NOTES

1. FOR INDEPENDENT OPERATION, THE SELECTOR SWITCHS NO.7,8 & 9 SHOULD BE SET FOR THE GENERATOR UNDER OPERATION.
2. THE SELECTOR SWITCH NO.6 SHOULD BE SET FOR THE GENERATOR TO BE SYNCHRONISED.

ASSAM PROJECT
(2X20KW UNITS WITH SYNCHRONISING AND WATER HEATING MODULE)

PRADEEP DIGITEK PVT LTD. ROORKEE (HARIDWAR)

CONTROL CABINET (FLOOR MOUNTED)

Size	Document Number		REV
B	DEEPESH	FPAN-01.SCH	4
Date:	March 15, 2000	Sheet 1 of 1	

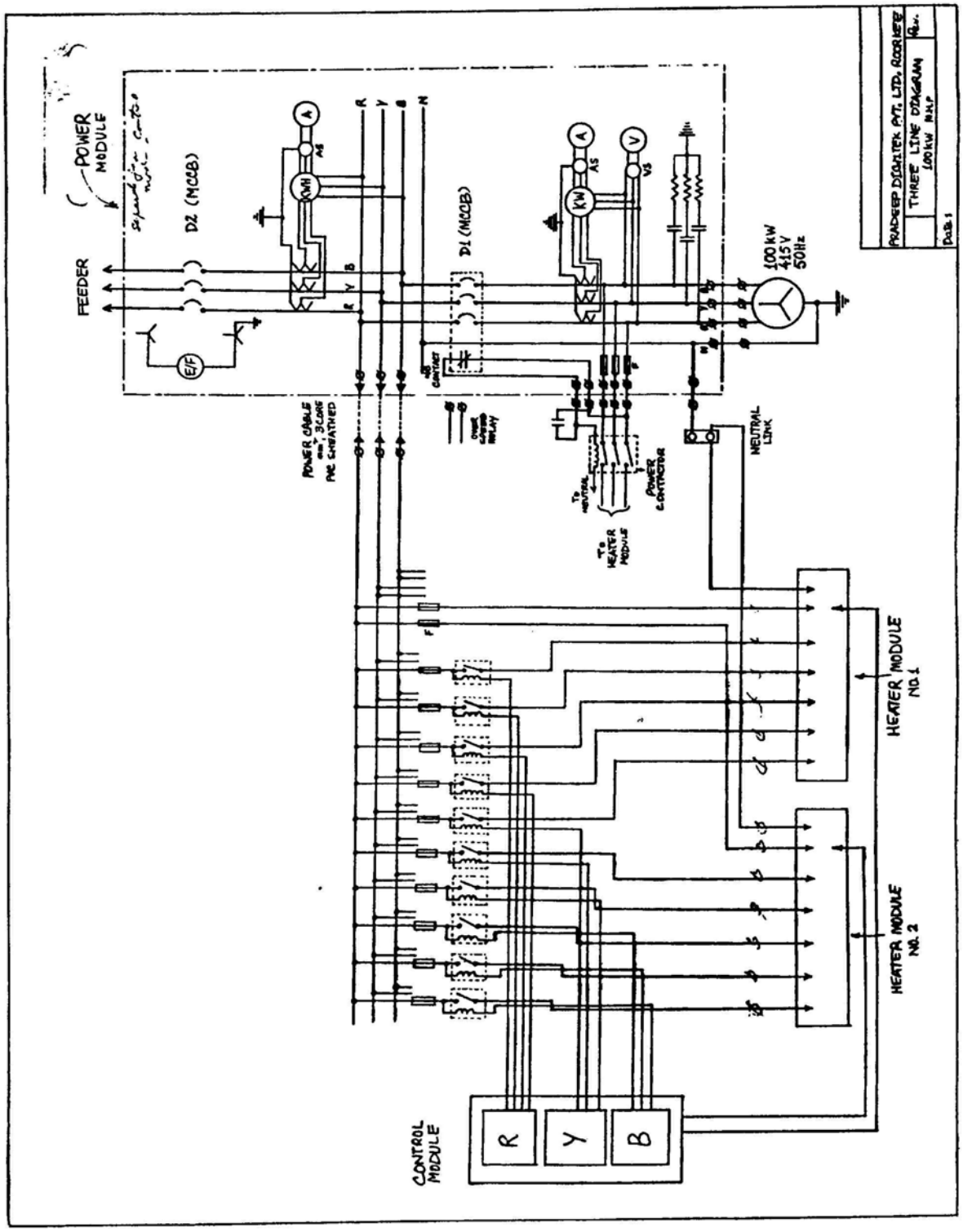
POWER MODULE
FEEDER
D2 (MCCB)
D1 (MCCB)
100 kW
415 V
50Hz
NEUTRAL LINK
HEATER MODULE NO.1
HEATER MODULE NO.2
CONTROL MODULE
R
Y
B
THREE LINE DIAGRAM
100kW

7.3 PROTECTION OF HYDRO STATIONS

7.3.1 General

Hydro turbine-generators should be protected against mechanical, electrical, hydraulic, and thermal damage that may occur as a result of abnormal conditions in the plant or in the utility system to which the plant is electrically connected.

The abnormal operating conditions that may arise should be detected automatically and corrective action taken in a timely fashion to minimize the impact. Relays (utilizing electrical quantities), temperature sensors, pressure or liquid level sensors, and mechanical contacts operated by centrifugal force, etc., may be utilized in the detection of abnormal conditions. These devices in turn operate other electrical and mechanical devices to isolate the equipment from the system.

Where programmable controllers are provided for unit control, they can also perform some of the described protective functions.

Operating problems with the turbine, generator, or associated auxiliary equipment require an orderly shutdown of the affected unit while the remaining generating units (if more than one is in the plant) continue to operate. Alarm indicators could be used to advise operating personnel of the changed operating conditions.

Loss of individual items of auxiliary equipment may or may not be critical to the overall operation of the plant, depending upon the extent of redundancy provided in the auxiliary systems. Many auxiliary equipment problems may necessitate loss of generation until the abnormal condition has been determined and corrected by operating or maintenance staff.

The type and extent of the protection provided will depend upon many considerations, some of which are:

(1) the capacity, number, and type of units in the plant;
(2) the type of power system;
(3) inter connection with the grid;
(4) manufacturer's recommendations;
(5) equipment capabilities; and
(6) control location and extent of monitoring.

Overall, though, the design of the protective systems and equipment is intended to detect abnormal conditions quickly and isolate the affected equipment as rapidly as possible, so as to minimize the extent of damage and yet retain the maximum amount of equipment in service.

Small hydroelectric power plants generally contain less complex systems than large stations, and therefore tend to require less protective equipment. On the other hand, the very small stations should be typically unattended and under automatic control, and frequently have little control and data monitoring at an off-site location. This greater isolation tends to increase the protection demands of the smaller plants.

An inherent part of the power plant protection is the design of the automatic controls to recognize and act on abnormal conditions or control failures during startup. Close coordination of the unit controls and other protection is essential.

7.3.2 Power Plant Mechanical Equipment Troubles and Protective Devices to Protect the Malfunction are outlined below:

7.3.2.1 Turbines

Excessive Vibration: Bearing/shaft vibration detectors consisting of vibration probes are provided on guide bearing housing of turbine and generator to detect excessive bearing and shaft vibration for alarm and tripping of the machine.

Bearing Problems: (a) Temperature detectors are provided to detect excessive bearing temperature for indication, monitoring, alarm and trip as follows:

(i) Turbine and Generator Bearing Shells
(ii) Bearing Oil Reservoir

(b) Bearing oil reservoir level high/low is also monitored for alarm.

Over-speed/Under-speed: Over-speed switch activated mechanically by means of a centrifugal device mounted on turbine shaft is provided for control and protection.

Synchronous-speed/under-speed/over-speed switches for control and protection are provided by electrically actuated speed relays by comparing the speed signal to a reference signal.

Speed signal failure should initiate shut down of the unit and annunciation.

Insufficient Water Flow: Water pressure transducer in the intake is provided for unit start up interlock and unit shut down if running.

Shear Pin Failure: Shear pin failure while closing wicket gated is alarmed.

Greasing system failure (if adopted) should be detected and alarm initiated.

7.3.2.2 Hydraulic Control System

Oil Pressure System for Turbine Governing, Inlet valve etc./Low accumulator oil level/Pressure: Pressure and Level switches are installed to alarm, block start up or trip unit as necessary.

Electrical, Electronic hydraulic malfunction in governing or gate positioning system are detected for alarm, control and tripping.

7.3.2.3 Water Passage Equipment

Failure of head gate or inlet valves: These are interlocked to block unit starting.

Trash rack blockage are detected by fall in (head race, water level)

Water Level Control: Level sensor (head race and tailrace) to monitor and control unit and water level switches are installed to alarm, block start up or trip if necessary.

7.3.3 Electrical Protection of Hydro Generator

7.3.3.1 Possible Faults

All faults associated with the unit may be classified as either insulation failure or abnormal running conditions.

An insulation failure will result in either an inter-turn fault, a phase to phase or an earth fault, but most commonly the latter since most insulation failures eventually bring the winding into direct contact with the core.

The abnormal running conditions to be protected against comprise:-

a. Overloading
b. Loss of excitation
c. Unbalanced loading
d. Lubrication oil failure
e. Failure of prime mover
f. Overspeeding
g. Rotor displacement
h. Excessive vibration

Stator Faults

Break down of winding insulation may result in any of the following types of faults:

(a) Earth faults, (b) Phase faults (c) Inter-turn faults

Other faults originating from defective joints or inadequate or defective of end turns or terminals will if undetected, reach a stage where there is a break down of insulation.

A fault to earth is liable to be caused by arcing to the core and may not only damage the conductor but also cause burning and welding of the laminations. To limit this damage it is almost universal practice to connect impedance or an earthing resistance between the generator winding neutral and the earth. Practice varies on the method adopted for earthing and the impedance used. Phase to phase or three-phase short circuit are not limited by the earthing impedance.

Rotor faults

The field system is not normally connected to earth, so an earth fault does not give rise to any fault current and is thus not in itself a danger. If a second earth fault develops then, however, a portion of the field winding may be short circuited, resulting in an unbalanced magnetic pull on the bearing causing rotor vibration and consequent failure of bearing surface or even displacement of the rotor sufficient to bend the shaft. In addition to this mechanical trouble, there is a possibility of overheating of field winding due to the automatic voltage regulator

action which may try to maintain the rotor flux inspite of the loss of turns that have been short circuited by the double earth fault.

Loss of Excitation

Failure of DC excitation causes the machine to run as an induction generator, the stator drawing magnetizing currents from the Ac system. Due to saliency, normal hydro generators may carry 20-25% of normal load without field and not lose synchronism. Loss of field when a hydro generator is carrying full load may cause over loading of the stator by operating at low power factor, and of over heating the rotor owing to induced currents in the rotor body and damper windings. The unit will impose VAR drain on the system.

Unbalanced Loading

An unbalanced load can be resolved into positive, negative and zero sequence components. The positive sequence component is similar to the normal balanced load, the negative sequence component is similar except that the resultant reaction field rotates counter to the D C field system and produces a flux which cuts the rotor at twice the rotational velocity. The double frequency eddy currents thus induced in the rotor are liable to cause heating of the rotor. Water wheel generators have a low rotational velocity and thus the heating in the rotor caused by small eddy currents is generally of less practical significance. It is only provided as a back up protection.

Over Voltage

Water wheel generators have a high over speed factor and the provision of over voltage protection is most desirable so that insulation is not damaged. This protection also serves to avoid damage if the voltage regulator system fails to operate correctly. The potential danger of such failure cannot be ignored with the high speed and high range of modern regulators, designed to meet long distance transmission stability requirements.

System Frequency Swing

Large hydro generator connected to EHV power system some times leads to severe system frequency swings because of the complexity of modern EHV power system. This may cause generator to go out of step.

7.3.3.2 Thermal Protection

(i) **Overheating** of generator stator winding and core due to over loading, failure of machine cooling system or stator lamination short circuit is detected by temperature sensors embedded at various points in stator winding. Temperature sensors for protection of generator stator winding continuously monitor temperature of the stator winding. The sensors are normally connected to data acquisition system for scanning, recording and alarm and tripping for abnormal temperature rise if necessary.

(ii) Failure of Cooling

Large hydro generators are provided close circuit air-cooling system with air/water cooler on the stator frame. Failure of the cooling system can result in rapid deterioration of the stator core lamination insulation and or stator winding

conductor and insulation. Cooling air temperature, cooling water supply pressure and temperature for each cooler is monitored for alarm and trip of the machine for abnormal conditions.

7.3.3.3 Stator Phase Faults Protection

Generator stator faults can cause severe and costly damage to insulation, windings and the core and can produce torsional shocks to shaft and coupling. The fault current does not cease to flow when the generator CBs is tripped from the system and field is disconnected. Accordingly high speed protection is required to trip and shut down the machine as quickly as possible to minimize damage. High speed differential relaying is used for phase fault protection of generator stator windings. It acts by comparing the current magnitude at the two ends of a phase winding in its most common form fig. 7.3.3.3.1

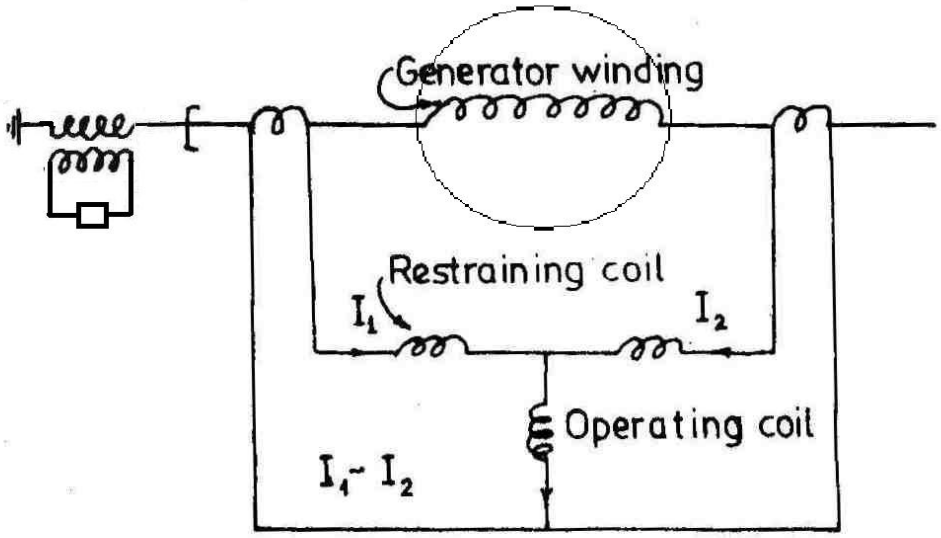

Fig. 7.3.3.3.1 Percentage Biased Differential Protection

For unit connected generator transformer back up protection is provided by an overall generator transformer fault. Differential relay with a coarser setting to take care of transformer magneting and inrush currents. Figure 7.3.3.3.2

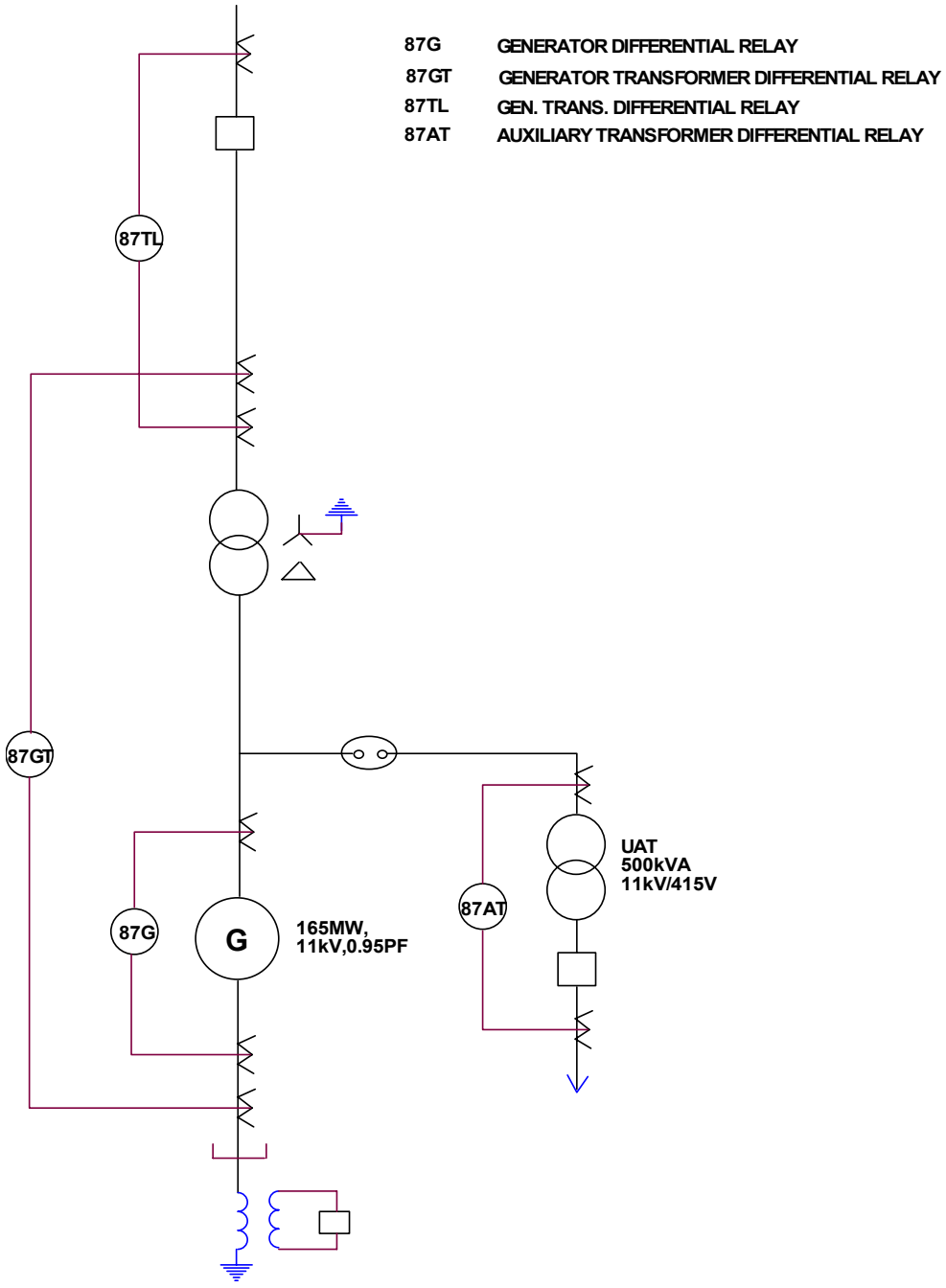

Fig. 7.3.3.3.2 Dehar Power plant generator phase fault, back up overall differential; interlinking line differential and auxiliary transformer differential

7.3.3.4 GENERATOR GROUNDING AND STATOR EARTH FAULT PROTECTION

Protective schemes to be provided for stator ground fault protection is directly related to how the generator is grounded and therefore to the magnitude of the ground fault current available.

The aspects of the problem that must be taken into account in a consideration of the neutral earthing of unit connected generators and providing earth fault protection are:

(a) Operational advantages
(b) Damages at the point of fault
(c) Sustained or transient over-voltages
(d) Relaying
(e) Thermal rating
(f) Protection against over-voltages
(g) Cost

Generator and low phase winding of the power transformer is not directly connected to the system and as such is usually earthed through a much higher impedance than when the generator is connected direct to the system. Since the available ground fault may be small or limited to low values, it is common practice to provide separate sensitive ground fault protection for generators depending upon generator grounding method which may supplement whatever protection that may be provided by differential relaying.

Low Resistance Earthing

In this scheme the generator neutral is earthed through a suitable resistance of about 10 seconds rating. A setting of 5% or less of the rated current of the generator by means of a current operated relay with inverse time characteristics is generally employed. In this case risk of dangerous over-voltage is eliminated for all practical purposes but it becomes essential to trip the generator as quickly as possible after the occurrence of an earth fault. Fault current is limited to 200-300 amperes. In U. S. practice as per IEEE C 37 – 102 in low resistance grounding the grounding resistor is selected to limit the generators contribution to a single phase to ground at its terminals to value in the range of 200 A upto 150% of rated full load current. The method of grounding is recommended for generator directly connected to station bus.

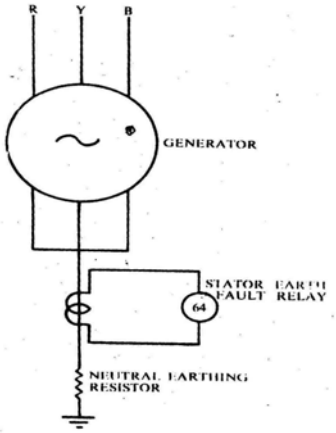

Fig. 7.3.3.4 Stator Earth Fault Protection (Resistance earthed system)

When the stator neutral is earthed through a resistor, a C.T. is mounted in the generator neutral and connected to an inverse time relay as shown in figure 3.3.4.1. In this case the inverse time relay will require grading with other earth fault relays in the system. With resistor earthing it is impossible to protect 100% of the stator winding the percentage of winding protected being dependent on the value of the neutral earthing resistor and the relay setting. Reducing the fault setting or increasing the current passed through the neutral earthing resistor does not give proportionate improvements in the amount of winding protected. For example, with a 100% full load resistor and a 20% setting, 80% of the winding is protected. Doubling the resistor rating or halving the setting only increase the amount of winding protected by 10%.

DISTRIBUTION TRANSFORMER (High Resistance) EARTHING

This is the most commonly used scheme for earthing of generators not directly connected to the system. This scheme consists of earthing, the generator, connecting leads and low phase winding of the power transformer through a small distribution transformer loaded with a resistor on its secondary side. This method is a compromise between the V. T. and resistance method of earthing and it combines their advantages and disadvantages. The protection provided consists in connecting a voltage relay in parallel or a current relay in series with resistor (See figure 7.3.3.4.2) so as to sound an alarm or to trip. A combination of sensitive alarm and coarser setting of alarm and time delay trip are also used. The latter gives time to transfer the load to another machine at the hazard of operating with a fault on one phase. The maximum earth fault current is determined by the size of the transformer and the loading resistor R. Optimum loading is when the power dissipated in the resistor equals the capacitive less in the generator system. At this point the transient over voltages possible are at a practical minimum. Increasing the power dissipation in the resistor beyond this point increases the energy in the fault arc and therefore the degree of damage. Primary voltage rating of the distribution transformer is required to be equal to be generator to neutral voltage and the practices is to keep it rated generator phase to phase voltage. The secondary winding 110/220 volts. The secondary resistor is selected so that for a single phase to ground fault at the generator terminal, the power dissipated in the resistor is equal to or greater than three time the zero sequence capacitive kVA to ground of the generator winding and all other equipment that may be connected to machine terminals. This method is considered high resistance grounding.

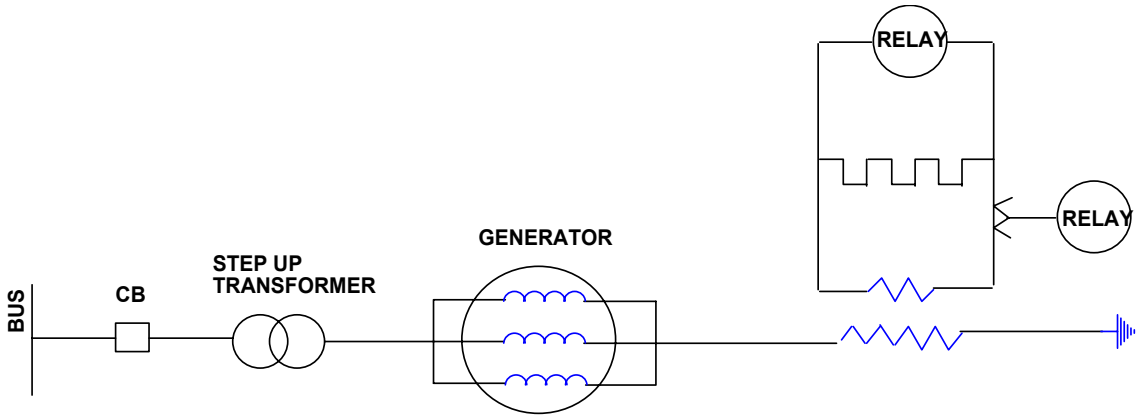

Fig.7. 3.3.4.2 Distribution transformer grounding scheme for unit connected generator

The following example illustrates the method of calculating the size of transformer and loading resistor transformer.

Assume that the zero sequence capacitance per phase is equal to 0.30 mfd (not this value includes the capacitance of the stator winding and connection to generator transformer, the primary winding of the transformer, and any lightning arrestors etc., which may be fitted).

Phase to ground capacitive reactance = $\frac{10^6}{217\text{x}50\text{x}0.30} = 10{,}000$ ohms

Assuming generator voltage to be 11.00 kV.

Zero sequence charging current on line to ground fault = $\frac{11.00\text{x}10^3}{\sqrt{3}\text{x}10{,}600} = 0.6$ amp.

Total capacitance current flowing through earthing transformer = 3 x 0.6 = 1.8 amp.

Capacitive VA = $\frac{11}{\sqrt{3}}\text{x}1.8 = 12$ kVA

Assuming the secondary of the transformer to be wound for 100 volts.

The current rating of the resistor should be

$\frac{12000}{100} = 120$ amp.

and the resistance $= \frac{100}{120} = 0.83$ ohms.

The rating of the distribution transformer $= \frac{11.0}{\sqrt{3}}\text{x}1.8 = 12$ kVA

Since the protective relay is arranged to shut down the set completely upon the concurrence of a stator earth fault, the distribution transformer and loading resistor need not be continuously rated, a one minute or 30 seconds rating being adequate.

For generators directly connected to the system are generally earthed through a resistance so that zero sequence faults current are greater than phase to phase faults.

The protection is connected for alarm and trip.

7.3.3.5 Rotor Faults

The field system is not normally connected to earth, so an earth fault does not give rise to any fault current and is thus not in itself a danger. If a second earth fault develops then, however, a portion of the field winding may be short circuited, resulting in an unbalanced magnetic pull on the bearing causing rotor vibration and consequent failure of bearing surface or even displacement of the rotor sufficient to bend the shaft. In addition to this mechanical trouble, there is a possibility of overheating of field winding due to the automatic voltage regulator action, which may try to maintain the rotor flux inspite of the loss of turns that have been short circuited by the double earth fault.

Generator Rotor Earth Fault Protection

There are several methods to detect this type of fault. They are:

1. Potentiometer Method
2. AC Injection method
3. DC Injection method

Each scheme relies upon the rotor earth fault closing an electrical circuit, the protection relay forming one branch of the circuit.

Rotor earth fault protection using D.C. injection is shown in Figure 3.3.5. In Brush less excitation system ground detection is not possible with conventional ground relays service the generator-fried connection are contained in rotating element, special methods are available.

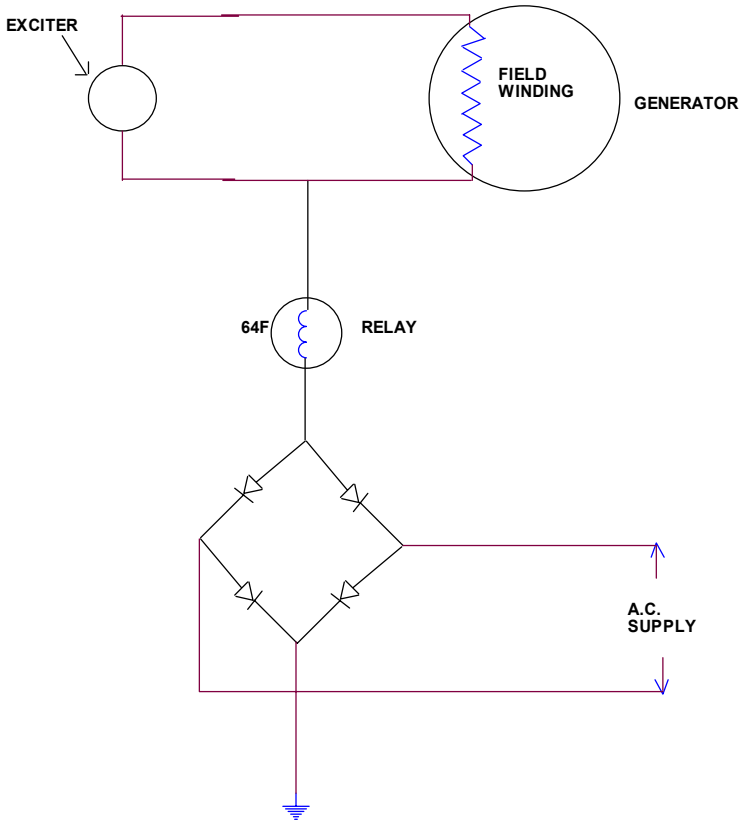

Fig. 7.3.3.5 Rotor earth fault protection using DC injection

7.3.3.6 Field Failure

Failure of field system results in generators acting above synchronous speed as induction generators, drawing magnetizing current from the system results in overloading of stator and overheating of rotor on continued operation. Large units may cause instability due to reactive power requirements from system and may require immediate shut down. Under current relay

in rotor circuit or offset mho distance relay in stator current is provided to detect this condition as shown in fig. 7.3.3.6.1 and 7.3.3.6.2.

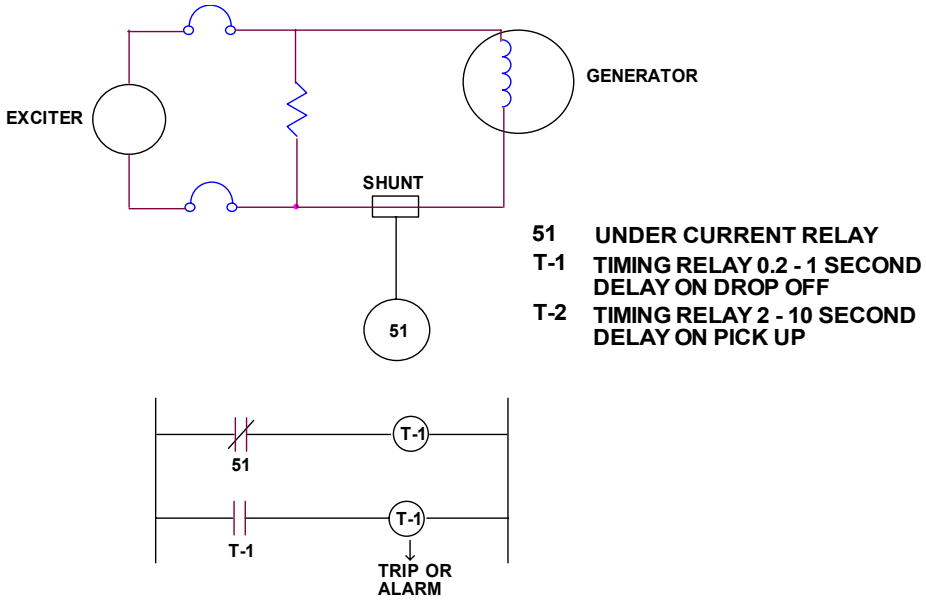

Fig. 7.3.3.6.1 Loss of field by under current relay

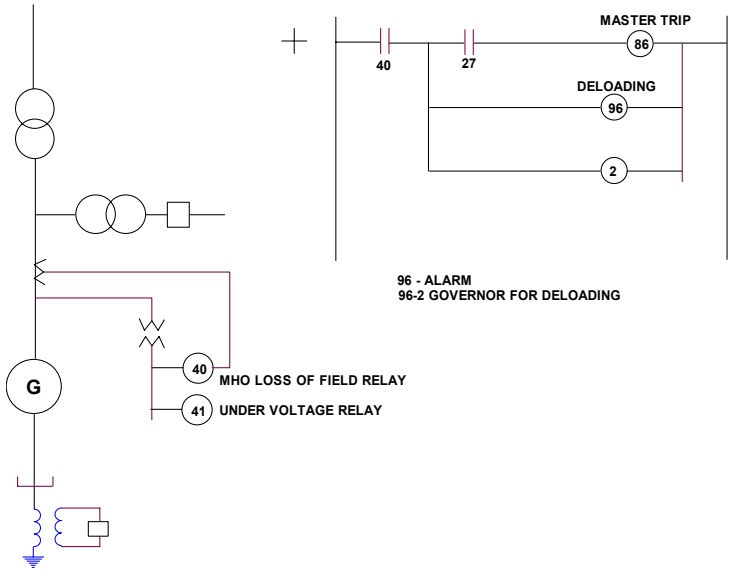

Fig. 7.3.3.6.2 Loss of filed protection using Mho relay

7.3.3.7 Unbalanced Loading

Negative sequence currents result in heating of the rotor, therefore, the amount of negative sequence current existing for any applicable time must be strictly limited. This applies more to steam generators with cylindrical rotors rather than to hydro-generators of the salient pole type, since, in the latter case, the damper winding provide a path for the double frequency currents.

Internal stator faults are cleared instantaneously by the differential protection but external faults or unbalance resulting from an open circuit may remain undetected or persist for a significant period depending on the protection co-ordination of the system. It is therefore, necessary to install a negative phase sequence relay with a characteristics to match the withstand curve of the machine. A practices is to provide protection for the generator for external unbalanced condition that might damage the machine. The protection consist of a time over current relay which is responsive to negative sequence current as shown in fig. 7.3.3.7. The relay is arranged to trip the main generator circuit breaker and give an alarm.

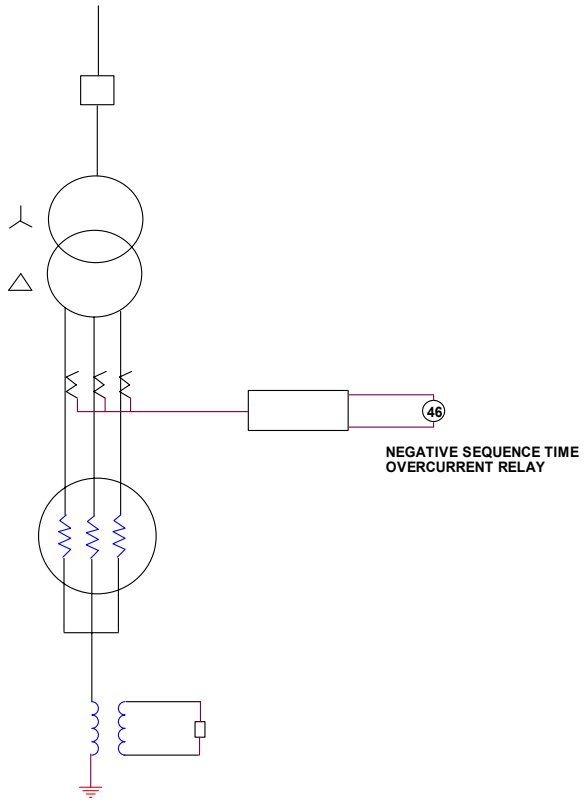

Fig. 7.3.3.7 – Unbalanced Current – Protection

Negative sequence protection for unbalanced loading has not been provided for Bhakra Left Bank Units. For Bhakra Right Bank Units and Dehar & pong Units of Beas the give alarm at a lower setting and trip the unit at a higher setting. This also acts as back-up for in zone faults to differential relays.

7.3.3.8 Over-voltage

Load rejection in hydro generators may cause speed rise to reach 200% of normal and cause a proportional rise in voltage if automatic voltage receiving end breaker of long interconnecting transmission line is tripped, the uncorporated capacitance of the line will further increase the voltage. A Dehar power palnt of Beas Satluj link project computer studies indicated that tripping of 400 kV be at receiving end resulted in 170% voltage rise.

Protection for generator over-voltage is provided by frequency insensitive over-voltage relay. It should have both instantaneous and time delay units with inverse time characteristics. Instantaneous inverse time step up to about 150% while inverse time may be set to peek up 110% of normal voltages. The protection should be set to trip main generator breaker and field breaker.

7.3.3.9 Back up Over Current Protection

Back-up over current protection may be provided to generator either (i) as standby protection against faults in the network or (ii) as a safeguard against failure of the generator unit protection.

In connection with the first case, the question of setting must be carefully considered and the rapid decrement of fault current fed by the generator must be taken into account. It is important that the generator is not tripped as a result of system faults even through the generator is operating under its maximum excitation condition and the relay setting must be chosen to discriminate with the outgoing circuit protection. The main aim is to provide a back-up protection and the over current relays are set, not so much with the intension of tripping under through faults but rather to guard against fault currents fed back from the system upon the occurrence of an in zone fault. So it is most usually provided with a voltage resistance and inverse time delay features so that tripping occurs only in case there is a fall in the generator.

In the second use, the over current relay serves as a very useful standby system of protection for such periods as for example, when the differential protection is being tested at which time the overcurrent settings can be varied at discretion to suit the temporary condition.

Back-up current protection has been provided for both Bhakra Left and Right Units and Beas project. With the advent of modern static quick response type automatic voltage regulators controlling large reserves of excitation power, the generator circuit decrement in fault condition is delayed and so that over-current/times settings can be chosen as to give back up cover against through fault conditions as well. In such cases, however, possible regulator is out of circuit for maintenance.

A typical Generator protection single line diagram is shown in fig. 7.3.3.9.

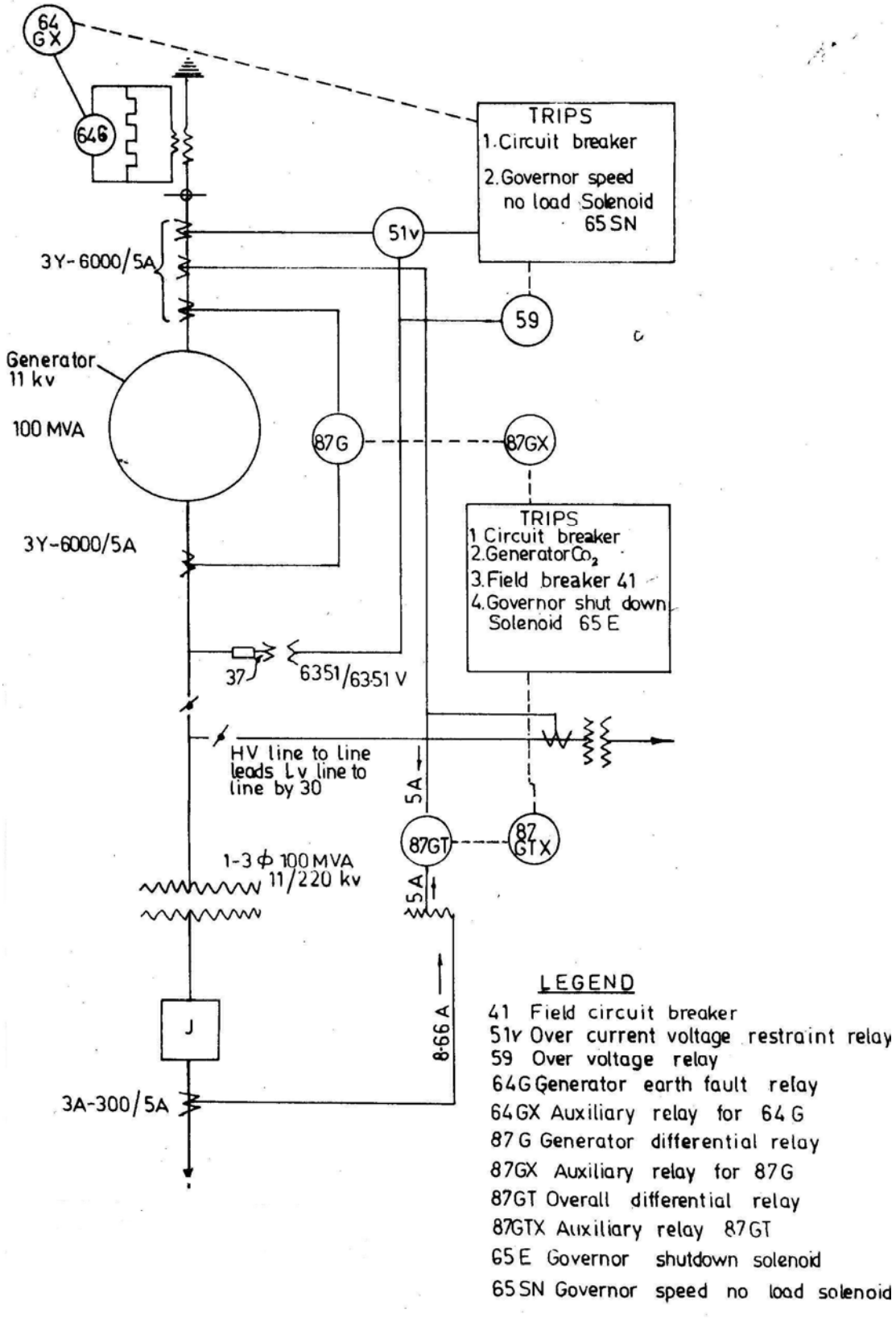

Fig. 7.3.3.9 Single Line Diagram

7.3.4 Transformer Protection

Faults in the winding usually start as failures turn to turn, but may occur from winding to ground. Turn-to-turn faults cause very high local heating and usually some arcing under but very little current in the external circuit. Such a fault have to involve more of the winding until sufficient current appeared in the external circuit to operate the differential relay.

In order to repair a transformer it is necessary to disassemble and restack the core in whole or in part. This is the more expensive part of the repair, so that as far as the windings are concerned there is no head for extremely high speeds in clearing a transformer winding fault.

However, undue delay is undesirable for the following reasons:

i) The arc may damage the major insulation and the second winding, or excess current may damage by heating parts or winding which could otherwise be used again.

ii) Prolonged arcing under oil may disintegrate it into gases which may form an explosive mixture at the top of the transformer. This may be ignited by a tiny spark and cause a severe explosion. The speed of clearance should be sufficiently fast that the time of any internal fault causing a serious disturbance will not conflict with the timing on any line or backup protection. The speed of clearance should be sufficiently fast that the time of any internal fault causing a serious disturbance will not conflict with the timing on any line or backup protection.

The current transformers on the various sides of the transformer zone should be such ratio that for healthy zone the sum of the incoming and outgoing is zero.

This requires that the current transformer ratio for each voltage rating of the transformer bank should be inversely proportional to the voltage. Where available current transformers do not satisfy this requirements, auto transformers in the secondary circuit can be used to obtain a proper balance.

For a star-delta transformer bank, the current transformers on the star side must be connected in delta and those on the delta side in star, since on star side the current transformers are in the “leg” and on delta side they are in “line”. Fig. 3.1 shows the connections for a differential a star delta transformer bank.

7.3.4.1 Protection scheme recommended by Central Board of irrigation and Power (CBI & P Manual on transformer 1987) for transformers, interlinking transformers etc. is as follows:

A. Generator transformers for 145 class; 245 class and 420 kV class transformers

i) Overall differential current relay covering generator zone also in addition to transformer differential protection.
ii) Restricted earth fault relay on HV side
iii) Over-flux relay
iv) Neutral over-current relay against sustained external system earth faults
v) Buchholz relay with alarm and trip contacts.

vi) Oil temperature indicator with alarm and trip contacts
vii) Winding temperature indicator with alarm and trip contact
viii) Magnetic oil gauge with low level alarm contacts
ix) Lightning arrestors on HV side (when located outdoors)
x) Pressure release device with trip contacts for transformers rated 100 MVA and above
xi) Oil flow indicator with one contact for alarm (if applicable)
xii) Water flow indicator with one contact for alarm (if applicable)

B 145 kV and 245 kV class Interlinking Auto Transformers

i) High speed differential relay with harmonic restraint feature.
ii) Restricted earth fault relay
iii) Back up over current and earth relay on both primary and secondary sides.
iv) Restricted earth fault relay
v) Over flux relay
vi) Oil temperature indicator with alarm and trip contact.
vii) Buchholz relay with alarm and trip contact
viii) Winding temperature indicator with three sets of contacts for alarm, trip and control of fans (ONAN/ONAF) and four sets of contacts (ONAN/ONAF).
ix) Magnetic oil gauge with low level alarm contacts
x) Oil surge protection for OLTC diverter tank with trip contact
xi) Lightning arrestors on both primary and secondary sides when the transformer is located outdoors and is connected to overhead lines.
xii) Pressure release device with trip contact for transformer rated 100 MVA and above

C. 72.5 kV Class Power Transformers

i) Percentage biased differential relay (without harmonic restraint) for power transformer up to 100 MVA.
ii) High speed differential relay with harmonic restraint feature) for power transformer of capacities above 100 MVA
iii) Back up over current relay on primary side
iv) Back up over current and earth fault relay on the secondary side
v) Oil temperature indicator with alarm and trip contact.
vi) Buchholz relay with alarm and trip contact
vii) Winding temperature indicator with alarm and trip contact. (For transformer having capacity upto 10 MVA)
viii) Winding temeprtaure indicator with three contacts one each for alarm, trip and control of fans (for transformer having capacities above 10 MVA)
ix) Magnetic oil gauge with low level alarm contacts
x) Lightning arrestors on both primary and secondary sides when the transformer is located outdoors and is connected to overhead lines
xi) Oil surge protection for on load tap changer diverter tank with trip contact
xii) Pressure release device with trip contact for transformer rated 100 MVA and above

D. 36 kV Class Power Transformers

i) 36 kV class power transformer of capacities rangeing from 3.15 MVA and above shall have the following protection
ii) Percentage biased differential relay (without harmonic restraint) for power transformer up to 10 MVA.
iii) High speed differential relay with second harmonic restraint differential device for power transformer of capacities above 10 MVA
iv) IDMT type over current relay with high set elements on the primary side
v) IDMT type over current and earth fault relay on the secondary side
vi) Oil temperature indicator with alarm one electrical contact for alarm or trip contact.
vii) Buchholz relay with alarm and trip contact
viii) Winding temperature indicator with two electrical contacts for (a) Fan alarm and (b) for transformers above 10 MVA
ix) Lightning arrestors on both primary and secondary sides when the transformer is located outdoors and is connected to overhead lines
x) Oil surge protection for OLTC (if provided) diverter tank with trip contact
xi) Pressure release device with trip contact for transformer rated 100 MVA and above

E. 12 kV Class power transformers

i) IDMT overcurrent relay shall be provided on the 11 kV side
ii) Overcurrent and earth fault relay shall be provided on the secondary side
iii) Buchholz relay with alarm and trip contact
iv) Oil temperature indicator with alarm and trip contact.
v) Lightning arrestors on both primary and secondary sides when the transformer is located outdoors and is connected to overhead lines

7.3.5 Station Bus Zone Protection

The bus differential is the simplest of the zone differentials since it involves protection of the bus wiring only. However, since many sets of current transformers may be connected in parallel, great care must be used in designing this protection so that the desired sensitivity and stability is obtained.

Even if all current transformers are exact duplicates and burdens have been reduced to a minimum, differences in current transformer performance may still be encountered first, due to D.C. saturation at high values of current, second, due to the condition where all short circuit current may flow out to an external fault through one set of current transformers but may flow into zone through a number of sets of current transformers. Obviously the current transformers carrying the total fault current will be operating on a different portion of the saturation curve than those on the various incoming leads. Thus special class C.T.S. are used.

Relay Used: Bus zone differential relays are used alongwith supervision and check relays so as to provide safeguards against false operation of relays for external faults due to different investigation levels of different circuits.

7.3.6 Transmission Line Protection

7.3.6.1 General Consideration

In any power system the majority of faults occur on overhead transmission lines, these being the most exposed elements of the system. Protective relaying for transmission lines is, therefore, most important.

The majority of faults on high voltage lines begin with the flashover of the insulation at one point; that is, a L-G fault, due to lightning or extraneous objects on lines such as trees, kites etc. However, L-L-G faults are quite common due to lightning and occasionally a simultaneous L-L-L-G fault due to lightning will occur. The L-G and L-L-G faults will produce a residual current on a grounded neutral system but the L.L.L.G fault does not usually do so. Faults of the L.L and L.L-L type will occur in wind or sleet storms, due to conductors swinging together. These faults do not produce residual currents. Line protection must, therefore, cover phase-to-phase faults which are free of ground as well as phase-to-ground faults. Detailed short circuit studies are required to be carried before promoting the protection for the transmission lines.

Lines may be divided into the following three classes:

(a) Two terminal lines
(b) Parallel lines
(c) Radial lines

7.3.6.2 Two Terminal Lines

Transmission lines, unlike apparatus or buses, have their terminals some distance apart. For this reason the zone differential which has been found to be the ideal protection for station zones cannot be used in its usual form on lines.

The general requirements for ideal line protection are as follows:

(a) The relays must operate instantaneously
(b) The relay scheme must be inherently selective
(c) The relays at both ends of the line must operate simultaneously for all line faults
(d) The relays must not respond to surging between generating sources as long as the generators do not fall out of step, in which case the relays should operate.
(e) The protection must cover all phase and ground faults.

The protective schemes in general use for phase and ground protection of two terminal lines are as follows:

(a) Over-current – with or without direction
(b) Distance protection – usually with direction
(c) Pilot wire for short lines
(d) Carrier current for long lines

Over-current Protection

For Phase-to-Phase Faults

The over-current relay scheme in either the high speed or timed induction type is not usually desirable for transmission lines due mainly to variations in the magnitude of the fault current under various system operating conditions and to the relative value of the minimum fault current and the full load current of the line.

Since high speed over-current relays must be set safely above the maximum through short circuit of the line section, their zone of safe selective operation is usually limited to only a small portion of the line. The timed induction over-current relay used to cover the remainder of the line must be set safely above the maximum load current with sufficient timing to be selective or external faults. Directional relays of either the wattmeter type or the high speed type are used with the over-current relays where direction is required.

Where minimum values of fault current are near the full load of the line, over-current relays are not applicable. However, where they can be used, they have the advantage of simplicity.

For Phase-to-ground Faults

On a system with grounded neutrals, any current which leaves a line conductor and returns to the neutrals via ground as in a fault to ground, is a residual current and can be measured in the neutral (common) load of the star connected secondaries of a set of current transformers in the three phases of that line. This current generally spearing represents a fault current quite independent of load. It can therefore, be used in a current relay of sensitive setting.

Where high speed ground protection is required the directional relay can be obtained in a high speed type for either current or voltage polarization.

The above type of ground protection, however, is of for use on a system which is grounded through a high resistance or reactance. In this case the value of the neutral current is controlled by the neutral condition and the location of the fault makes little difference to the value of the neutral current. On such a system some type of distance relay would have to be used and directioned by the above type of directional relay.

Even on a solidly grounded system the above protection, since it uses an inverse time-current characteristic, has the disadvantage that to some extent it is dependent on the system capacity connected and on the number of grounded banks.

7.3.7 Distance Protection

The distance relay of the impedance and reactance and more type are use.

7.3.7.1 For Phase-to-Phase Faults

7.3.7.2 The Impedance Type

In this type phase-to-phase voltage is mechanically balanced in the relay against the current of the proper phase, with the current acting to close the contacts. For ratio E/I greater than a

certain value, which is adjustable and is the distance setting of the relay, the contacts will be kept open, whereas for lower values the contacts will be closed. This ratio represents an impedance which neglecting resistance of a fault itself, is a constant for any given length of line, that is, an impedance relay can be set to cover any desirable length of line.

For all types of faults involving more than one phase wire of a line, the impedance relay has the following desirable features:

(a) It gives accurate and dependable high speed protection for these faults over approximately 80% of the line. It gives timed protection over the whole line with a back-up effect for terminal H.V. buses. Terminal station zones and tandem line sections must clear sufficiently fast to be selective with this timing.
(b) It is to a very large extent independent of connected generating capacity and configuration of the system both for its accuracy and speed and will even operate on fault currents below full load. It will operate accurately on any current which will give 5 percent drop over the section protection. It can be designed to operate in 1/60 second or less for all faults except those close to the boundary conditions of fault current or distance.
(c) It can be used on any line sufficiently long that the fault impedance (arc resistance) does not add a sufficient amount to the line impedance to prevent operation. The arc resistance is proportional roughly to the length and usually about 300 to 500 volts per foot. A high speed relay will cause tripping before an arc starts to expand.
(d) The impedance relay is relatively simple in construction.

7.3.7.3 The Reactance Type

These relays have been developed to avoid the inaccuracy due to resistance at the fault. They are considerably more complicated than the impedance type. They measure the reactance to the fault and their range is not in general affected by the length of the arc except to the extent that any current in the arc from the other end of the line may have a component out of phase with the current in the relay and produce the effect of a reactance drop in the arc which may add to or subtract of a reactance drop in the arc which may add to or subtract from the measured reactance of the line, causing an error.

This type of relay can be used successfully on shorter line than the impedance type, on account of the smaller effect of the arc.

7.3.7.4 The distance relay to whichever type has the following disadvantages and limitations:

(a) It requires voltage accurately proportional to the line voltage at the relaying point. This calls for either potential transformers or equivalent potential devices, all of which are expensive on high voltage system.
(b) The distance relay without voltage will close its contacts at very low current and on the most accurate relays it may balance closed when not energized. Such a relay will trip if it loses its voltage. Since voltage sources are subject to various sources of interference, some safeguard against tripping on loss of voltage is required. This may take one of the following forms:

    (i) A directioned element arranged to open its contacts quickly when voltage is removed. In a properly adjusted directional distance relay, the tripping

is blocked by the open directional contacts when voltage is removed. Care is required as to the relative speeds of the directional and distance elements in all cases of removal or replacement of voltage either accidentally or due to the onset and clearance of a fault.

(ii) By an over-current element provided, the system characteristics are such that the fault current is always above load current. The current element acts as a fault detector and its open contacts block the tripping except in the case of a fault.

(iii) If the minimum fault current is liable to be below the setting of the current relay, a second distance relay may be used, using the same current as the first impedance relay but a separate source of voltage.

On unusually long lines the distance relay may not be able to distinguish between load swings and fault conditions. On such lines, although there is little difference in the impedance magnitude during fault and load conditions, there is a considerable difference in the phase angle of the impedance. A relay has been developed whose operation is governed by the impedance angle. It is called the "Mho" relay because actually it measures an admittance at an angle. It is inherently directional. Basically this protection uses an impedance faults, and the Mho element to distinguish between fault and load conditions. The angle setting of the Mho element is so selective that the protection can be made to block on normal loads and power swings, but will trip on out-of-step condition instantaneous when the angle crosses a threshold value.

7.3.7.5 For Phase-to-Ground Faults

For this application three distance relays similar to those used for phase-to-phase protection are used. However, in this case phase-to-neutral voltage is balanced either against line current or against neutral current. A directional relay of either the current-current type or voltage-current type as described above under over-current relaying is used to direction the ground impedance relays.

Although the distance relay may be applied with precision to phase-to-phase faults, its application to line-to-ground faults is subject to errors in the measurement of distance, some of which are difficult to eliminate.

The following are the more important factors which cause these errors:

(a) The fault resistance includes not only that of the arc but of the tower or pole ground and of the return path. These later may vary greatly with different locations on the line and may have high values – higher than the impedance of the line. This difficulty may be overcome to some extent on a steel tower line by interconnecting the towers with one or more sky wires which gives the effect of a number of tower grounds in parallel.
(b) The reactance of the line for ground faults is not the normal line-to-neutral reactance of the line, but is based on the 'zero sequence reactance' of the line which depends on the distance of the effective return path of the ground current known as the 'equivalent ground plane'. This varies with details of sky wires, soil and probably other factors. It is difficult to calculate but may be determined by measurement.

(c) Where two lines parallel each other at close spacing, such as on a double circuit tower line, the apparent impedance of the lie depends to a large extent on the zero sequence mutual impedance between the lines. This impedance becomes quite appreciable in comparison with the self-impedance, particularly when a fault occurs near the remote end of the line. The impedance measured by the relays, therefore, does not necessarily bear any fixed relation to the length of the line or to the location of the fault. This relation changes with the fault location and with the system arrangement. The mutual impedance tends to reduce the fault current under certain conditions and increase it under other conditions, depending upon the relative directions of the ground current and the induced current.

(d) When the fault current divides and comes from two or more points to the fault, the proportion of the current in conductor which is residual or zero – sequence depends upon the relative impedance to phase and ground currents in that branch and, due to the fact that the impedance of the line is much higher to ground current than to phase current, a relatively greater portion of the residual current will usually come from the end of the line nearer the fault.

It is apparent that careful investigation is required for every application and setting of such a relay. Various and somewhat complicated methods have been proposed for counteracting the sources of error, so that the impedance relay can be used accurately for phase-to-ground fault protection.

However, there are numerous places where stepped range directional distance relaying of this type, without complications, can be used, successfully, for line-to-ground faults. For example if a line section has a dead-grounded neutral at each and, a residual distance relay must be given a very long setting to the far end and may safely be set beyond the open line ground impedance. However the relays at the two ends will always over lap the middle of the line. The result is that for a line-to-ground fault, one end trips out instantly, followed at high speed by the second end, both on the instantaneous range. This protection has the advantage that it is less affected by the connected generator capacity when any high speed, residual current type.

7.3.7.6 Modern Schemes

Modern schemes for line protection e.g. phase comparison or directional comparison etc. using carrier or other communication signals are very effective especially in EHV system.

7.3.8 Typical Metering & Relaying Scheme

A typical metring and relaying schemes for a two hydro power plant with unit connected generator transformers, a single sectionalized bus and two HV feeders is enclosed 7.3.8.1 & 7.3.8.2.

7.3.9 Small Hydro Protection

A typical scheme for protection of a small hydro unit recommended as per IEEE 1010 with a step up transformer is shown in fig. 7.3.8. This scheme may be adopted for small generators above 1 MW unit size.

For lower capacity small hydro system could be simplified as required. For micro hydels overcurrent; ground fault current protection only may be adequate.

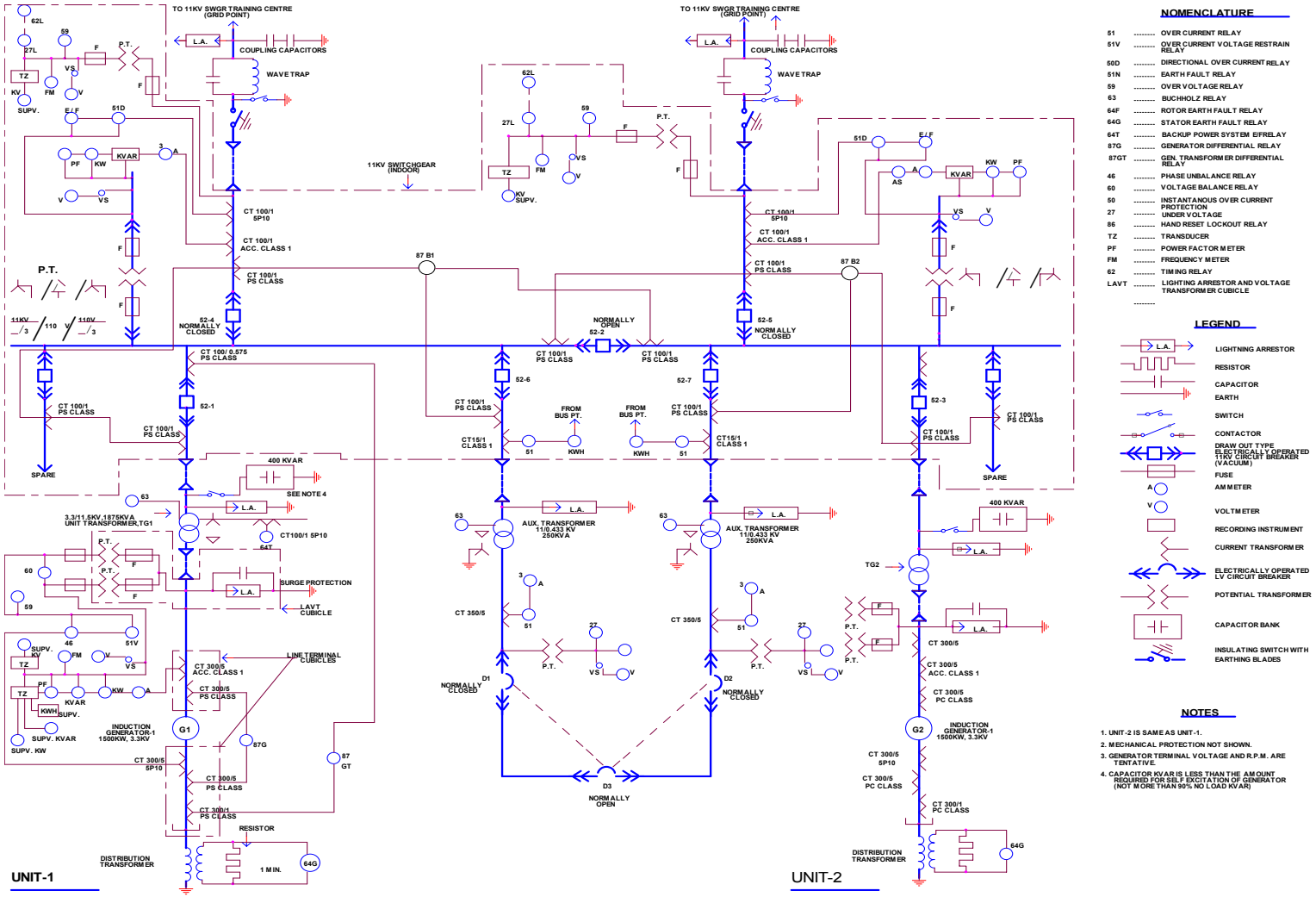

NOMENCLATURE

51	OVER CURRENT RELAY
51V	OVER CURRENT VOLTAGE RESTRAIN RELAY
50D	DIRECTIONAL OVER CURRENT RELAY
51N	EARTH FAULT RELAY
59	OVER VOLTAGE RELAY
63	BUCHHOLZ RELAY
64F	ROTOR EARTH FAULT RELAY
64G	STATOR EARTH FAULT RELAY
64T	BACKUP POWER SYSTEM E/FRELAY
87G	GENERATOR DIFFERENTIAL RELAY
87GT	GEN. TRANSFORMER DIFFERENTIAL RELAY
46	PHASE UNBALANCE RELAY
60	VOLTAGE BALANCE RELAY
50	INSTANTANOUS OVER CURRENT PROTECTION
27	UNDER VOLTAGE
86	HAND RESET LOCKOUT RELAY
TZ	TRANSDUCER
PF	POWER FACTOR METER
FM	FREQUENCY METER
62	TIMING RELAY
LAVT	LIGHTING ARRESTOR AND VOLTAGE TRANSFORMER CUBICLE

LEGEND

- LIGHTNING ARRESTOR
- RESISTOR
- CAPACITOR
- EARTH
- SWITCH
- CONTACTOR
- DRAW OUT TYPE ELECTRICALLY OPERATED 11KV CIRCUIT BREAKER (VACUUM)
- FUSE
- AMMETER
- VOLTMETER
- RECORDING INSTRUMENT
- CURRENT TRANSFORMER
- ELECTRICALLY OPERATED LV CIRCUIT BREAKER
- POTENTIAL TRANSFORMER
- CAPACITOR BANK
- INSULATING SWITCH WITH EARTHING BLADES

NOTES

1. UNIT-2 IS SAME AS UNIT-1.
2. MECHANICAL PROTECTION NOT SHOWN.
3. GENERATOR TERMINAL VOLTAGE AND R.P.M. ARE TENTATIVE.
4. CAPACITOR KVAR IS LESS THAN THE AMOUNT REQUIRED FOR SELF EXCITATION OF GENERATOR (NOT MORE THAN 90% NO LOAD KVAR)

Fig. 7.3.8.1 Typical Metering and Relaying Single Line Diagram

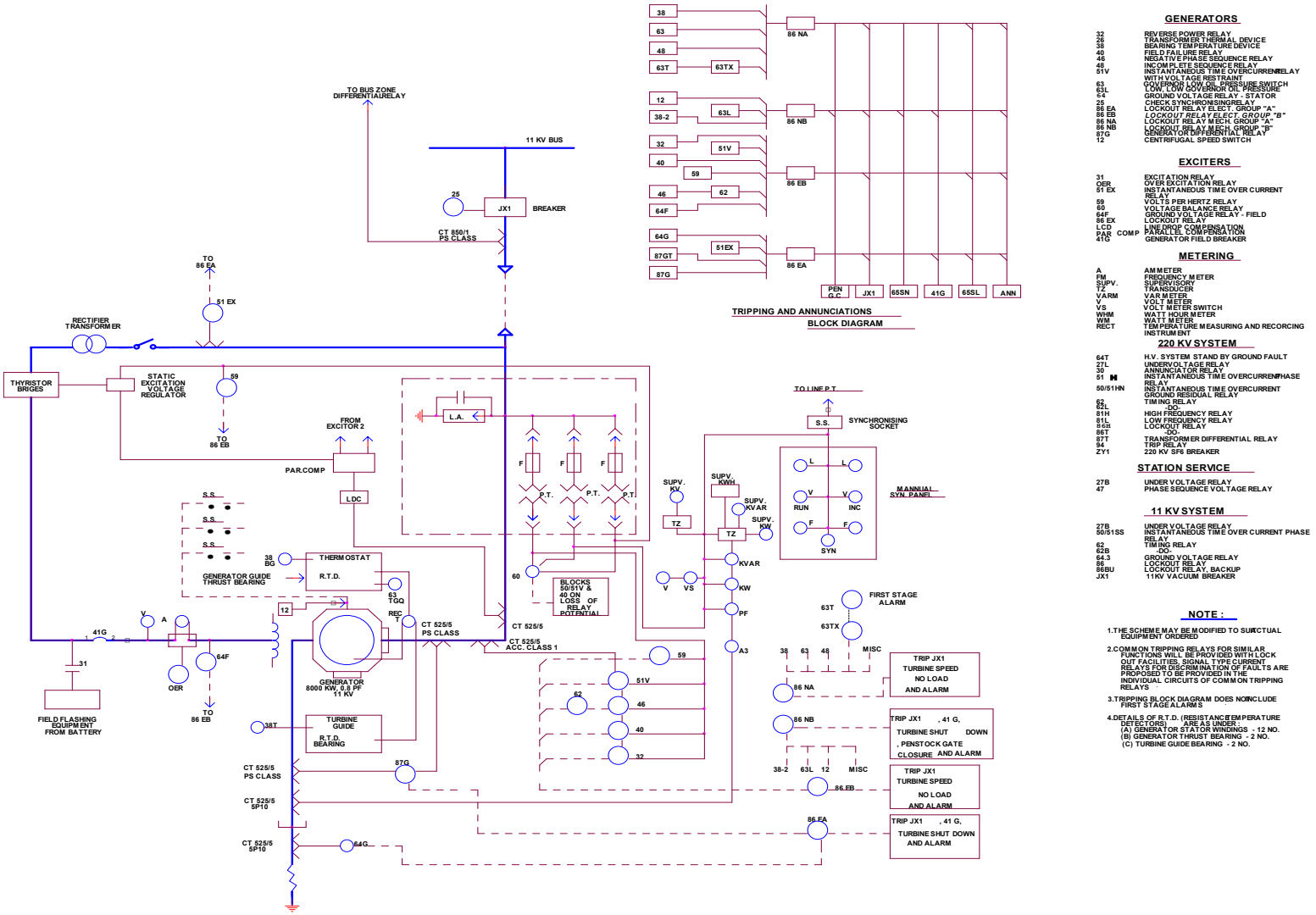

GENERATORS

32	REVERSE POWER RELAY
26	TRANSFORMER THERMAL DEVICE
38	BEARING TEMPERATURE DEVICE
40	FIELD FAILURE RELAY
46	NEGATIVE PHASE SEQUENCE RELAY
48	INCOMPLETE SEQUENCE RELAY
51V	INSTANTANEOUS TIME OVERCURRENT RELAY WITH VOLTAGE RESTRAINT
63	GOVERNOR LOW OIL PRESSURE SWITCH
63L	LOW LOW GOVERNOR OIL PRESSURE
64	GROUND VOLTAGE RELAY - STATOR
25	CHECK SYNCHRONISING RELAY
86 EA	LOCKOUT RELAY ELECT. GROUP "A"
86 EB	LOCKOUT RELAY ELECT. GROUP "B"
86 NA	LOCKOUT RELAY MECH. GROUP "A"
86 NB	LOCKOUT RELAY MECH. GROUP "B"
87G	GENERATOR DIFFERENTIAL RELAY
12	CENTRIFUGAL SPEED SWITCH

EXCITERS

31	EXCITATION RELAY
OER	OVER EXCITATION RELAY
51 EX	INSTANTANEOUS TIME OVER CURRENT RELAY
59	VOLTS PER HERTZ RELAY
60	VOLTAGE BALANCE RELAY
64F	GROUND VOLTAGE RELAY - FIELD
86 EX	LOCKOUT RELAY
LCD	LINE DROP COMPENSATION
PAR COMP	PARALLEL COMPENSATION
41G	GENERATOR FIELD BREAKER

METERING

A	AMMETER
FM	FREQUENCY METER
SUPV.	SUPERVISORY
TZ	TRANSDUCER
VARM	VAR METER
V	VOLT METER
VS	VOLT METER SWITCH
WHM	WATT HOUR METER
WM	WATT METER
RECT	TEMPERATURE MEASURING AND RECORCING INSTRUMENT

220 KV SYSTEM

64T	H.V. SYSTEM STAND BY GROUND FAULT
27L	UNDERVOLTAGE RELAY
30	ANNUNCIATOR RELAY
51 N	INSTANTANEOUS TIME OVERCURRENT PHASE RELAY
50/51HN	INSTANTANEOUS TIME OVERCURRENT GROUND RESIDUAL RELAY
62	TIMING RELAY
62L	-DO-
81H	HIGH FREQUENCY RELAY
81L	LOW FREQUENCY RELAY
86GR	LOCKOUT RELAY
86T	-DO-
87T	TRANSFORMER DIFFERENTIAL RELAY
94	TRIP RELAY
ZY1	220 KV SF6 BREAKER

STATION SERVICE

27B	UNDER VOLTAGE RELAY
47	PHASE SEQUENCE VOLTAGE RELAY

11 KV SYSTEM

27B	UNDER VOLTAGE RELAY
50/51SS	INSTANTANEOUS TIME OVER CURRENT PHASE RELAY
62	TIMING RELAY
62B	-DO-
64 3	GROUND VOLTAGE RELAY
86	LOCKOUT RELAY
86BU	LOCKOUT RELAY, BACKUP
JX1	11KV VACUUM BREAKER

NOTE :

1. THE SCHEME MAY BE MODIFIED TO SUIT ACTUAL EQUIPMENT ORDERED
2. COMMON TRIPPING RELAYS FOR SIMILAR FUNCTIONS WILL BE PROVIDED WITH LOCK OUT FACILITIES, SIGNAL TYPE CURRENT RELAYS FOR DISCRIMINATION OF FAULTS ARE PROPOSED TO BE PROVIDED IN THE INDIVIDUAL CIRCUITS OF COMMON TRIPPING RELAYS .
3. TRIPPING BLOCK DIAGRAM DOES NOT INCLUDE FIRST STAGE ALARMS
4. DETAILS OF R.T.D. (RESISTANCE TEMPERATURE DETECTORS) ARE AS UNDER .
   (A) GENERATOR STATOR WINDINGS - 12 NO.
   (B) GENERATOR THRUST BEARING - 2 NO.
   (C) TURBINE GUIDE BEARING - 2 NO.

Fig. 7.3.8.2 Typical Metering & Relaying Single Line Diagram

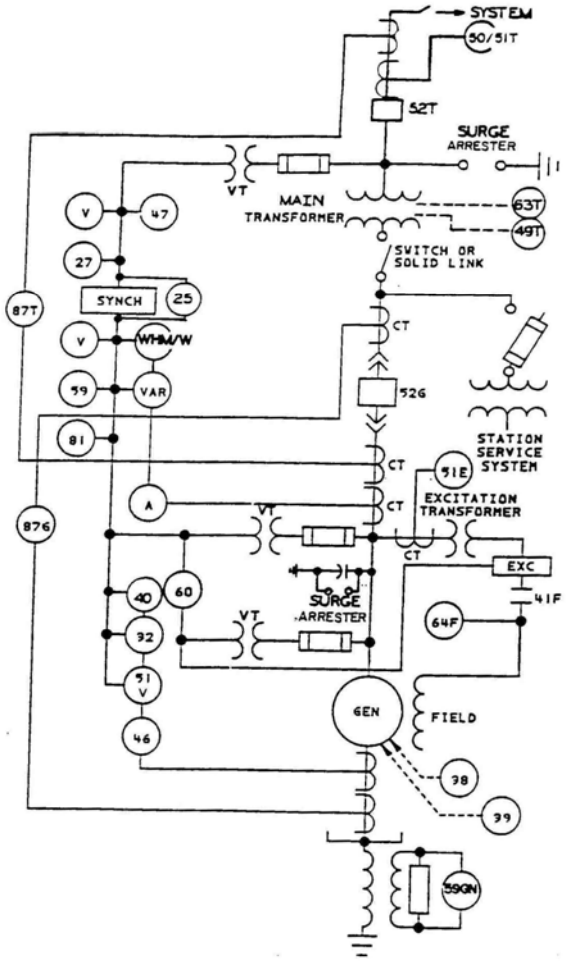

Fig. 7.3.9 Typical Single Line Diagram for a Small Hydro Unit

25	Synchronism Check Relay
27	Under Voltage Relay
32	Reverse Power Relay
38	Bearing temperature Relay
39	Vibration Detector
40	Loss of Excitation Relay (Impedance Type Relay Shown)
41F	Field Excitation Circuit Breaker
46	Negative Sequence or Unbalanced Current Relay
47	Phase Sequence Check Relay (for Sycnronizing)
49T	Transformer Hot Spot Protection
51E	Exciter Overcurrent Relay
50/51T	Transformer Overcurrent Relay
51V	Voltage Restrained or Voltage Controlled Overcurrent Relay
52G	Generator Circuit Breaker
52T	Transformer High Side Circuit Breaker
59	Overvoltage Relay
60	Voltage Balance Relay (Blown VT Fuse Detection)
63T	Transformer Sudden Pressure Relay
64F	Field Ground Relay
59GN	Generator Ground Fault Relay
81	Under/Overfrequency Relay
87G	Differential Relay for Generator
87T	Differential Relay for Transformer

A	Ammeter
CT	Current Transformer
Exc.	Exciter
Synch.	Synchronizing Circuitry
V	Voltmeter
VAR	VARmeter
VT	Voltage Transformer
WHM/W	Watt Hour Meter/Watt Meter

CHAPTER – 8

ELECTRICAL AUXILIARIES

8.1 General Design Considerations

The electrical items of Works of the auxiliary systems including mechanical installations should generally fulfil the requirements as given below. All components should be of reliable design.

The power supply and control cables should be laid up to the common terminal blocks. The Contractor should ensure that various control/protection devices and instruments should be uniform, interchangeable and connected as per system requirement.

Ratings of main electrical works as selected or proposed, whether originally specified or not, should generally include a safety margin of 10%. Short circuit calculations, de-rating factors, etc. should be carried out and taken into consideration for design.

Short-circuit calculations should be evaluated and every electrical component should withstand the maximum stresses under fault conditions, for fault levels and durations obtained under the worst conditions, e.g., upon failure of the corresponding main protection device and time delayed fault clearing by the back-up protection device.

All Works should be suitable for the prevailing climatic conditions and insensitive to any signals emitted by wireless communication equipment.

Clearances : The layout of the equipment in the power house should provide ready access for operation and maintenance whilst the remaining sections of equipment are alive. Working clearance provided between isolated equipment and nearest live metal work should be as per Indian Electricity rules & Standards.

Electrical Supplies For Auxiliary Equipment : The electricity supplies available for various auxiliary equipment will be :

(i) 415 V, ± 10%, 3-phase 50Hz, 4-wire for A.C. power supply,
(ii) 220 V, ±10%, single phase, 50 Hz for lighting, indication, and anti-condensation heaters,
(iii) 110 V ±10% DC for essential indication, controls, protection, alarms and circuit breaker closing and tripping supplies.
(iv) 24 V DC for SCADA System.

Alternating Current Supply Practice: All mains supplies should be through MCBs of appropriate rating. Double-pole switches should be used to break single-phase A.C. mains supplies. For multi-phase supplies, each phase should be switched simultaneously and the neutral should preferably not be switched.

Direct Current Supply Practice : Power supply bus bars in cubicles should be carefully routed and each bus bar should be shrouded. It should not be possible to inadvertently short bus bars either between themselves or to earth. It should be possible to remove/replace cards from/to electronic equipment without damage and without interfering with the operation of the rest of the equipment or system.

8.1.1 Electric Motors

General : All motors should conform to IS 325 induction motors and should comply with BS for motor dimensions and fitted with suitable eyebolts. AC motors should have squirrel cage type rotors. The insulation of all the motors should be of class F but temperature rise during operation should be limited to class B insulation. It should be suitable for operation in damp locations and for occasional contact with corrosive gases/vapors.

Ventilation and Type of Enclosure : All motors should be of the totally enclosed fan-cooled type, protection class IP 54 according to IEC Recommendation 144. Cable termination points should be of class IP55. Vertical motors should be provided with a top cover to prevent the ingress of dirt and droplets etc.

Terminal Boxes and Earthing : The terminals, terminal boxes and associated equipment should be suitable for terminating the power cables. The terminal boxes should be of ample size to enable connections to be made in a satisfactory manner. For earthing purposes, each motor should have adequately sized bolts with washers at the lower part of the frame. In addition, each terminal box should contain one earthing screw.

Motor Voltages and Power Ratings : The service voltages and corresponding power ratings for electric motors to be used should be as follows:

Motors up to 1 kW

- Service voltage : single-phase a.c. 240 V, 50 HZ
- Mode of starting : condenser

Motors above 1 kW and up to 75 kW

Service voltage : 3-phase a.c. 415/240 V,50 HZ

Mode of starting : direct-on-line up

Motors intended to work on the D.C. System

- Service voltage : 110/220 V D.C. as per battery voltage
- Mode of starting : resistor
-

Rating : The rating of the motors should be adequate to meet the requirements of its associated driven equipment. The service factor, being the ratio of the installed motor output to the required power at the shaft of the driven machine at its expected maximum power demand, should be applied as follows:

Power Demand of Driven Machine	Service Factor
Up to 5 kW	1.2
More than 5 kW	1.1

A.C. motors should be capable of operating continuously under rated output conditions at any frequency between 95% and 105% of the rated frequency and/or with any voltage variation between 90% and 110% of the nominal voltage. A transient over voltage of 130% of the nominal voltage should be sustained.

Further, the motors should be capable of maintaining stable operation when running at 70% nominal voltage for a period of 10 seconds. The pullout torque for continuously loaded motors should be at least 160% of the rated torque and for intermittently loaded motors 200% of the rated torque.

D.C. motors should be capable of operating continuously under rated output conditions at any voltage between 90% and 110% of the nominal voltage with a fixed brush setting for all loads. The speed drop between no-load and full-load should not exceed 10% of no-load speed.

Starting : A.C. motors should be designed for direct on-line starting. They should be capable of being switched on without damage to an infinite busbar at 110% of the nominal voltage with an inherent residual voltage of 100% even in phase opposition. For starting the motors from the individual main and auxiliary busbars, a momentary voltage drop of 20% referred to nominal voltage should be taken into consideration. With 85% of the nominal voltage applied to the motor terminals, each motor should be capable of accelerating its associated load to full speed with a minimum accelerating torque of 5% of full load torque.
The maximum starting currents (without any tolerance) should not exceed the following values:

- 5 times of rated current for L.V. motors rated 100 kW or above
- 2 times of rated current for D.C. motors (by means of starting resistors)

Generally, all motors should be able to withstand five cold starts per hour, equally spaced. Each motor should be capable of withstanding three successive starts under the same conditions or once every fifteen minutes without detrimental heating. Motors for frequent automatic starting should have an adequate rating.
Noise-Level and Vibrations : Under all operating conditions, the noise level of motors should not exceed 75 dB (A) at any place 1.0 m away from operating equipment. All motors should be statically and dynamically balanced. The vibration amplitude should not exceed values specified in IS 4729.

Tests : Each motor should be factory tested and should undergo a test at site. The following tests should be performed under full responsibility of the Contractor.
Workshop Tests:

- Measurement of winding resistances
- No-load and short-circuit measurements
- Measurement of starting current and torque
- Efficiency measurement (type test)

- Heat test run
- Dielectric test
- Measurement of insulating resistance

8.1.2 Starters and Contactors

A.C. motors should be designed for direct on-line starting. They should be capable of being switched on without damage to an infinite busbar at 110% of the nominal voltage with an inherent residual voltage of 100% even in phase opposition. For starting the motors from the individual main and auxiliary busbars, a momentary voltage drop of 20% referred to nominal voltage should be taken into consideration.

With 85% of the nominal voltage applied to the motor terminals, each motor should be capable of accelerating its associated load to full speed with a minimum accelerating torque of 5% of full load torque.
The maximum starting currents (without any tolerance) should not exceed the following values:

- 5 times of rated current for L.V. motors rated 100 kW or above
- 2 times of rated current for D.C. motors (by means of starting resistors)

Generally, all motors should be able to withstand five cold starts per hour, equally spaced. In addition, each M.V. motor should be capable of enduring two successive starts with the motor initially at operating temperature. Each L.V. motor should be capable of withstanding three successive starts under the same conditions or once every fifteen minutes without detrimental heating.

Motors for frequent automatic starting should have an adequate rating. In the motor list the Contractor should state the frequency of starts permitted in compliance with the motor design.

Motor starters and contactors should be equipped with short circuit protection and local disconnecting devices. The control circuit voltage should be obtained from a 415/240 V isolating transformer with primary circuit breaker and secondary fuse. The secondary winding of this transformer should be grounded. The operating coils of the contactor should be connected between the grounded side of the transformer and the control contacts.

Starters and contactors should comply with IEC 292.1 or National Electrical Manufacturer Association USA standard NEMA IC 1 and be suitable for direct on-line starting, uninterrupted electrical duty, and capable of 30 operations per hour. They should be installed in ventilated enclosures for indoor installation and weatherproof enclosures for outdoor installation. The enclosures should be complete with locks, cable sealing boxes, conduit entries, cable gland plates, bus bars, internal wiring, terminal boards, etc. as required by the duty of the starter.

Thermal type overload and phase failure relays should be supplied with starters for motors of 7.5 kW or greater. For motors of less than 7.5 kW, suitable rated 3-

phase thermal overloads may be provided. Ammeters to read current in one phase should be provided for motors above 7.5 kW.

Bearings

As far as possible, the motors should have sealed ball or roller bearings lubricated for live. All other motors with ratings of about 1 kW and above should be equipped with lubricators permitting greasing while the motor is running and preventing over-lubrication. Additionally, the bearings should be fitted with grease nipples permitting the use of a universal grease gun. Vertical motors should have approved thrust bearings.

Terminal Boxes and Earthing

The terminal leads, terminals, terminal boxes and associated equipment should be suitable for terminating the respective type of cables as specified in these General Technical Specifications and in the Particular Technical Specifications.

The terminal boxes should be of ample size to enable connections to be made in a satisfactory manner. Supports should be provided at terminal boxes as required for proper guidance and fixing of the incoming cable.

The terminal boxes with the cables installed should be suitable for connection to supply systems with the short-circuit current and the fault clearance time determined by the motor protective devices.

A permanently attached connection diagram should be mounted inside the terminal box cover. If motors are provided for only one direction of rotation, this should be clearly indicated.

For earthing purposes, each motor should have adequately sized bolts with washers at the lower part of the frame. In addition, each terminal box should contain one earthing screw. Each equipment/panel should be earthed by at least two separate earthing strips.

Noise-Level and Vibrations

Under all operating conditions, the noise level of motors should not exceed 75 dB (A).

In order to prevent undue and harmful vibrations, all motors should be statically and dynamically balanced.

Tests

Each motor should be factory tested and should undergo a test at site. The following tests should be performed.

Workshop Tests:

- Measurement of winding resistances
- No-load and short-circuit measurements
- Measurement of starting current and torque
- Efficiency measurement (type test)
- Heat test run
- Dielectric test
- Measurement of insulating resistance

8.1.3 Moulded Case Circuit Breakers

All moulded case circuit breakers should be of 2 or 3-pole type as required, with requisite short time rating having thermal time delay and instantaneous trips with "On-Trip-Off", indicating/operating mechanism. Circuit breakers used in combination type motor starters or contactors should have the operating mechanisms interlocked with the starter or contactor cover so that the cover cannot be opened unless the circuit breaker is open.

8.1.4 Terminal Blocks

All terminal blocks should be mounted in an accessible position with the adequate spacing between adjacent blocks and space between the bottom blocks and the cable gland plate. Sufficient terminals should be provided to allow for the connection of all incoming and outgoing cables, including spare conductors and drain wires. In addition, 20 percent spare terminals should be provided. Not more than two conductors should be connected under one terminal clamp.

Terminal blocks should conform to the applicable standards. Circuit terminals for 415/220 VAC and 110/220 VDC should be segregated from other terminals. and should be equipped with non-inflammable, transparent covers.

8.1.5 Equipment Wiring

All wiring connections should be readily accessible and removable for test or other purposes. Wiring between terminals of the various devices should be point to point. Multi-conductor cables should be connected to the terminal blocks in such a manner as to minimise crossovers.

Each conductor should be individually identified at both ends through a system providing ready and permanent identification, utilising slip-on ferrules approved by the Engineer. Markers may be typed individually or made up from sets of numbers and letters firmly held in place. Markers must withstand a tropical environment and high humidity and only fungus proof materials will be accepted. Ferrules of adhesive type should not be acceptable. All trip circuits should employ markers having a red background.

8.1.6 Cubicles and Control Panels

Cubicles and control panel enclosures should be of sheet steel with minimum thickness of 2.0 mm, vermin proof, rigid self-supporting construction and supplied with channel bases. Cubicles should be fitted with close fitting gasketted and hinged doors capable of being opened through 180 deg. The doors of all cabinets/panels should be provided with similar integral lock.

The cables and wiring should enter from bottom or top as necessary for the layout through cable glands. The cubicles and panels should be adequately ventilated by vents or louvers. Space heating elements with thermostatic control should be included in each panel.

All cubicles and panels should be provided with a ground bus with copper bar extending through out the length. Each end of this bus should be drilled and provided with lugs for connecting ground cables.

All instruments, control knobs and indicating lamps should be flush mounted on the panels. Relays and other devices sensitive to vibration should not be installed on doors or hinged panels and no equipment should be installed on rear access doors. The exterior finish of all the panels should be uniform. The interior of all cubicles and panels should have a mat white finish unless specified otherwise.

Switched interior light and socket outlets should be provided for all cubicles and control panels. All cubicles and control panels should be provided with nameplates, identifying the purpose of the panel and all of its components.

8.1.7 Earthing

Provision should be made for earthing all equipment intended for connection in an A.C. mains supply. All structural metal work and metal chassis should be connected to earth. Connection between circuits and metal work should only be made for reasons of safety and/or reduction of interference. Where such connections are made, they should not be used as normal current-carrying earth returns. Earthing conductors should be at least equal in cross-sectional area to the supply conductors and should be capable of carrying the fault current.

8.1.8 Single-Line Diagrams

Each switchgear should be furnished with a copy of the final as-built single-line diagram detailing all electrical data and denominations, separate for each individual switchgear/distribution board/MCC, placed under glass and frame mounted at an approved location. The same applies to the Station Single-Line Diagram one copy of which should be arranged in the control room.

8.1.9 Instrumentation And Control Equipment

Design Criteria

Shielded cables should be provided for the control and supervisory equipment where required.

Sizes of Indicators, Recorders etc.: The meters, instruments and recorders should be of standard size, to be selected to guarantee unique appearance of switchgears, control panels, control desks, etc. The front glasses should be of the anti-glare type.

Measuring Systems: Electric measuring signals of 4-20 mA should be transmitted to the control room for essential or regulating circuits. Measuring signals for indicating purposes will be 4-20 mA. Measuring ranges of indicators, transducers, etc. should be selected in such a way that the rated value of the measured magnitude covers approx. 75% of the range.

All local instruments should, as far as practicable, be mounted vibration free to allow good reading. Wherever required, damping elements should be used. Corresponding systems should be grouped together in local panels.

8.1.9.1 Temperature Measurement

Platinum Resistance thermometers of type Pt 100 should be used. The use of dial-type contact thermometers should be restricted to bearing metal temperature measuring.

Resistance thermometers should be equipped with waterproof connection heads. The temperature sensors should be selected in such a way to minimise the number of different spare inserts.

8.1.9.2 Pressure Measurements

Pressure gauges should be shock and vibration-proof (preferably by filling with glycerine) and the movement should completely be made of stainless steel. The casings should be dust and watertight and be made of stainless steel. The adjustment of the pointer should be possible by means of an adjustment device without removing the pointer from its axle.

Each gauge, pressure switch and transmitter for absolute or differential pressure should be equipped with a pressure gauge isolating valve including a test connection of the screwed type M20 x 1.5 mm so that such device can be removed without any disturbance of the plant operation. If the pressure is pulsating, the devices concerned should be connected via flexible tubes or other pulse-absorbing means.

The error for pressure transmitters should be limited to ±0.5%.

8.1.9.3 Level Measurements

The liquid level measurements in reservoirs and tanks with atmospheric pressure should be made by means of capacitance measurement type. The errors should not exceed ± 1.0% of the total measuring range.

8.1.9.4 Electrical Measurements

All Electrical instruments should be of flush mounted design, dust and moisture-proof. A.C. ammeters and voltmeters should have digital type system of not less than 1.5 accuracy class. D.C. measuring instruments should also be digital type of the same accuracy. Wattmeters should be suitable for unbalanced systems and accuracy of energy meters should be of 0.2 % accuracy class.

All indicating instruments should generally withstand without damage a continuous overload of 20% referred to the rated output value of the corresponding instrument transformers. Ammeters should not be damaged by fault-currents within the rating and fault duration time of the associated switchgear via the primaries of their corresponding instrument transformers. All instruments and apparatus should be capable of carrying their full load currents without undue heating. Means should be provided for zero adjustment of instruments without dismantling.

When more than one measured value is indicated on the same instrument, a measuring point selector switch should be provided next to the instrument and should be engraved with a legend specifying each selected measuring point.

CT connected Ammeters provided for indication of motor currents should be provided with suppressed overload scales of 2 times full scale. The dials of such ammeters should include a red mark to indicate the full load current of the motor.

All instruments mounted on the same panel should be of same style and appearance.

8.1.9.5 Position Measurements

Position transmitters for continuous position indication and measuring transducers should have an output current of 4-20 mA and aux. supply voltage (if required) 24 V D.C.

8.1.9.6 Limit Switches

Limit switches should be mounted suitable for easy adjustment and for rigidly locking in position after being adjusted. They should be of heavy-duty rating and have two changeover contacts suitable for 110 V D.C. operation.

Switch fixings should be positive and should be unaffected by vibration. At the same time they should be capable of easy adjustment to suit changing parameters of the associated plant. Particular attention should be paid to

potentially harmful environmental conditions, including water, oil, dust, dirt, temperature variations and differential expansions.

8.2 AUXILIARY POWER FOR HYDRO-ELECTRIC STATIONS

8.2.1 Design of auxiliary power system for large hydroelectric plants

Auxiliary Power For Large Hydro-Electric Stations may be designed in accordance with the following paper attached as Annexure 1.

AUXIAIRY POWER FOR LARGE HYDRO ELECTRIC STATIONS by Prof. O. D. Thapar - Power Engineer, 1965, vol. 15, Pages 6-13

General design considerations given in Para 8.1 should be taken an account for designing the system.

8.2.2 Design of auxiliary power system for small hydroelectric plants

The design of auxiliary power system for small hydro system may be designed in accordance with a typical arrangement shown in Annexure 2 for Mukerian power plant (2 x 8 MW) SHP. Generator breaker and unit system of connection is proposed.

In case bus at generator voltage is proposed the design of auxiliary power system can be as typically shown in Annexure 3 which was designed for 2 x 9 MW Saursahtra Branch Canal Power Stations.

AUXIAIRY POWER FOR LARGE HYDRO ELECTRIC STATIONS

By
Prof. O. D. Thapar

HYDRO-ELECTRIC units with very large unit and aggregate capacities have recently been constructed and still larger are being planned especially in Russia. Bratsk power station in Siberian region of U.S.S.R. contains 18 units of 225 MW each, while Krasnayarskaya power station will have 12 units of 500 MW each. In India, the Bhakra power plants on the two sides of river Sutlej, having a total installed capacity of 1050 MW for 10 units, will be the biggest hydro-electric installation. In U.S.A., Dalles Dam power plant with 22 units of 82,105 kVA each has been recently commissioned.

Auxiliaries in a hydro-electric station consume very little power as compared to steam or nuclear station – say about 0.5-1.0 percent of the gross output. But it is the integrity of this power on which rests to a large degree the usefulness of the remaining power.

The purpose of this article is to examine some design consideration for the supply of power to the auxiliaries with special reference to present-day trends. To limit the scope of the article, only large hydro power stations have been considered.

Auxiliary Equipment

The auxiliaries in usual power plant can be divided into two categories: (a) unit auxiliaries; (b) station service auxiliaries.

Unit auxiliaries may consist of the following:
Governor oil pump motor
Cooling water pump motor (if used)
Turbine lubricating and drainage pump motors
Generator space heater
Generator rotor jacking pump motor
Amplidyne motor (if used)
Turbo-blower (if necessary in a variable head plant)
Speed level and gate selsyn
Oil pump motors of oil coolers for unit transformers (if used)
Electric drive for valve motors

(b) Station service auxiliaries may consist of the following equipment. There may be several units of each type of equipment:
1. Motor generator sets for battery charging
2. Air-compressor motor
3. Unwatering pump motor
4. Drainage pump motor]
5. Ventilation fans

Power Engineer, 1965, vol. 15, Pages 6-13

6. Air-conditioning equipment

7. Transformer oil handling pump motor

8. Governor and lubricating oil handling pump motor
9. Waste oil disposal pump motor
10. Oil purifier centrifuge pump motor
11. Machine shop equipment
12. Main power plant crane supply
13. Electrical laboratory power supply
14. Sewage disposal pump
15. Treated water pump (if provided)
16. Elevator motor generator supply (if provided)
17. Switchyard power circuit
18. Power outlet circuit
19. Lighting power supply

Requirements for Auxiliaries Supply

The power requirements for the hydro power plant auxiliaries as enumerated above can be estimated at an early stage of design and form the fundamental parameters of the station.

Obviously, it is necessary to include a margin in rating of power station auxiliaries and consequently most auxiliary motors run at less than full load under normal condition. A load factor is thus obtained which reduces the actual maximum demand to approximately 60-70 percent of the running installed power for the auxiliary.

Main consideration in designing the system for source of power is as follows, but ideal auxiliary system should remain a simple system:

1. Service should not be interrupted by system disturbances.
2. Service continuity be maintained under all conditions.
3. There should be provision for starting the station from cold.
4. First cost, maintenance cost and operating cost should be low.
5. Safety of personnel, simplicity of operation and ease of maintenance be ensured.

Source of supply – Main sources of auxiliary power in a hydro-electric station may be:

(a) House station service generators
(b) Transformer connected to generator leads
(c) Direct supply from another station
(d) Main station buses through house transformers

A combination of the methods of supply is used and the auxiliary bus and switching arrangements may duplicate any of the arrangements for main electrical connection.

Unit Supply

The idea of unit power generation has been quite universally adopted especially for larger units. The unit auxiliaries system associated with unit generation is fed by two independent sources of power generation, one derived from the generating unit and the other may be from the station bus-bars, supplying station services as well as providing standby for the unit auxiliaries.

Typical arrangement is shown in Fig. 3. This method has been quite extensively adopted in the recent very large hydro-electric station in U.S.S.R. The rating of the unit transformer is based on the total connected capacity of running unit auxiliaries i.e. excluding standby drives. As such the transformer is operating at about 75 percent full load throughout most of its life. The unit supply by transformers connected directly to generator leads is a reliable and economical source of power and has been very extensively used in recent practice. This power supply is, however, susceptible to disturbances during severe faults in the main system, but system disturbances are somewhat cushioned by the impedance of the generator transformer. Application of modern high speed protection, coupled with the ability of modern motors to recover its speed after momentary voltage drop, has made this source of power supply all the more dependable.

The total load of the auxiliaries in hydro-electric station being small (as compared to steam or nuclear stations) all the units in a large hydro-electric station may not be provided with unit transformer. Instead generator leads of only a few of the units may be tapped by transformers. A typical arrangement is shown in Fig. 2. The rating of these transformers is generally large enough so as to cater to the needs of running unit and station auxiliaries standby supply.

For unit type station a supply independent of the individual units is necessary and the station supply must be available when all units are shut down. As large stations usually operate in interconnected system, this supply could be obtained from the main bus-bars through step-down transformers. An additional starting supply is necessary in case of the stations which are intended for operations on isolated systems. This supply may be a small diesel plant or a self-contained house set.

Normally one such station service transformer is enough unless the number of hydro-electric units is exceptionally large (see Fig. 4 – Bratsk station in U.S.S.R.). This transformer should have a capacity large enough to meet the maximum demand of all the auxiliary load of the power house.

Selection of Voltage

The distribution voltage to be used should be selected on a cost basis. For most of the large station, a two-voltage system using 3.3 kV (or 6 kV) and 415 V. has been generally adopted. Fault level, current rating, voltage regulation and copper losses of the system are the main factors involved in comparing the costs.

The voltage drop on starting auxiliaries does not normally present any special problem except in the cooling water pumps (if used) in case of unit auxiliaries or large unwatering pumps in case of station auxiliaries. This can be improved upon by restricting

starting current for these motors and by adjusting the size of the transformers feeding unit auxiliaries so that a large dip in supply voltage is avoided when the motor is switched on.

Sometimes if the unwatering pumps are of large capacities, it may be preferable to feed these motors on 3.3 kV and the motor obtained should have sufficient acceleration torque with voltage down to 80 percent of the normal value.

Some voltage adjustment at the transformer is useful and it is a usual practice to provide off-circuit tapping of 2.5 and 5 percent on unit and station service transformers.

Fault level

The voltage selected for an auxiliary system is closely associated with the fault level and both have to be considered in order to determine the most economical arrangement, the next higher standard voltage being adopted when the rating limit of available switchgear of a given voltage is reached. As previously stated, a two-voltage system keeps the fault level in big hydro-electric unit within proper limits. Insertion of reactors for limiting fault currents are liable to cause voltage regulation problems and should be avoided.

On the units boards, if paralleling of different sources of power is prevented by providing suitable interlocks, switchgear of a lower breaking capacity can be used. The induction motors contribute a fault current of short duration due to the effect of residual magnetism. This current approaches the motor, starting current (5 times full load current) at full voltage and decays within a few cycles. It is therefore desirable to take this into account while calculating the fault level of the auxiliaries system.

Earthing

The practice and opinion on the type of grounding for the auxiliaries system varies. An ungrounded system may be operated with an accidental ground on one phase until alternative arrangements for supply can be made. But an ungrounded system is more prone to a ground fault, which is difficult to locate. A second ground fault on a different phase may occur before the first one is repaired and in the later event it is liable to cause lot of damage. On the other hand, a ground fault on an auxiliary system with solid or resistance earthing is quickly isolated by relays with no loss of service to unaffected portions of the system. With solid earthing the system voltage surges are the lowest, while with resistance earthing earth fault currents can be reduced to comparatively small values.

The present trend is to use solid earthing on voltage transformer earthing. The extra cost of resistance earthing is not justifiable.

Earthing of the equipment is by connection to the combined station earthing system. Bare copper wires or strips solidly connected to main earthing grounding mats have been used. In Russian practice, however, all earthing is being done by M.S. strip-all connections being welded.

Auxiliaries Control

The present-day trend in modern power plants is towards increased centralization of controls, aiming at more and more of automation. This is due to the fault that hydro plants can be started at very short intervals and are thus ideally suited for push button starting or closing. Automatic starting by drop of system frequency is being quite widely adopted in Russia, as a measure of enhancing static stability of the power system. In U.S.A. some large hydro-electric generating stations are now being planned for remote control from a central computer control station so as to also provide for automatic loading, unloading and voltage control, besides of course automatic starting and stopping of the unit. The standby auxiliaries, i.e. governor oil pump, bearing forced lubrication pumps, unwatering and drainage pumps, etc., on which the safety of the plant depends are arranged for automatic start up, initiated electrically on failure of the main auxiliary or by an abnormal condition of pressure, water level, or temperature.

The control and instrumentation of the hydro turbine and the hydro generator units are centralized to allow for overall supervision by one operator who can make any necessary adjustments without delay. In most of the large hydro-electric stations, it has also become a practice to centralize all controls of auxiliaries associated with starting, running and stopping of the entire unit on separate boards named unit control boards. These boards for each pair of units are located at or near the turbine floor level. In some cases (Dalles Dam power plant) provision for synchronizing the generating units has also been included. It, however, seems that synchronization as well as loading of the unit can be conveniently done from main electrical control room.

The main control room thus accommodates equipments for synchronizing, unit load control and control for outgoing feeders. The control for the main supply circuits for the auxiliaries is also provided in the main control room. To have only one control room and eliminating unit control boards in hydro stations having large number of unit may be profitable and is liable to reduce cost, and number of operators.

Automatic switching of selected standby and emergency auxiliaries is necessary to prevent dangerous conditions arising on failure of running auxiliaries. Automatic change-over of entire unit auxiliaries to the alternate source of supply is an unnecessary complication and is an avoidable additional expenditure for stations with large units, as failure of the main supply is usually the result of a major fault, which should be investigated.

Typical Arrangements of Auxiliary Systems

The arrangement of auxiliaries system depends upon a variety of conditions, e.g. layout source of power supply, distribution system associated with a particular power station, etc. The arrangement as based upon these considerations is selected so as to give the best and most economic solution. In this article it is possible to refer only to some relevant aspects of the auxiliary systems for a particular station. The arrangements of auxiliary systems referred to in this article for the power plants in U.S.S.R. have been adopted from the drawings studied during the author's visit to U.S.S.R. and represent the basic system only.

Figs. 1 and 2 show the auxiliary systems for Bhakra power plants which contain 5 sets of 100 MVA each in power plant I on the left bank and 5 units of 134 MVA each on power plant II on the right bank (under construction). The main source of power supply

is the station transformers connected to generator leads, while the standby supply is essentially from the station service transformer connected to the tertiary winding of the interlinking transformer connecting the main station buses at different voltages, in power plant I. Further, as can be seen from the diagram, voltages of 3.3 kV and 415 V. have been adopted. Fault level on 415 V. in power plant I was kept 25 MVA by specifying more than normal impedance for the 3.3 kV/415 V. transformers. In power plant II, the number of transformers were for the same reason increased to four and higher than normal impedances adopted to keep down the fault level to 15,000 amps. and thus economize on much cheaper 415 V. switchgear and cables.

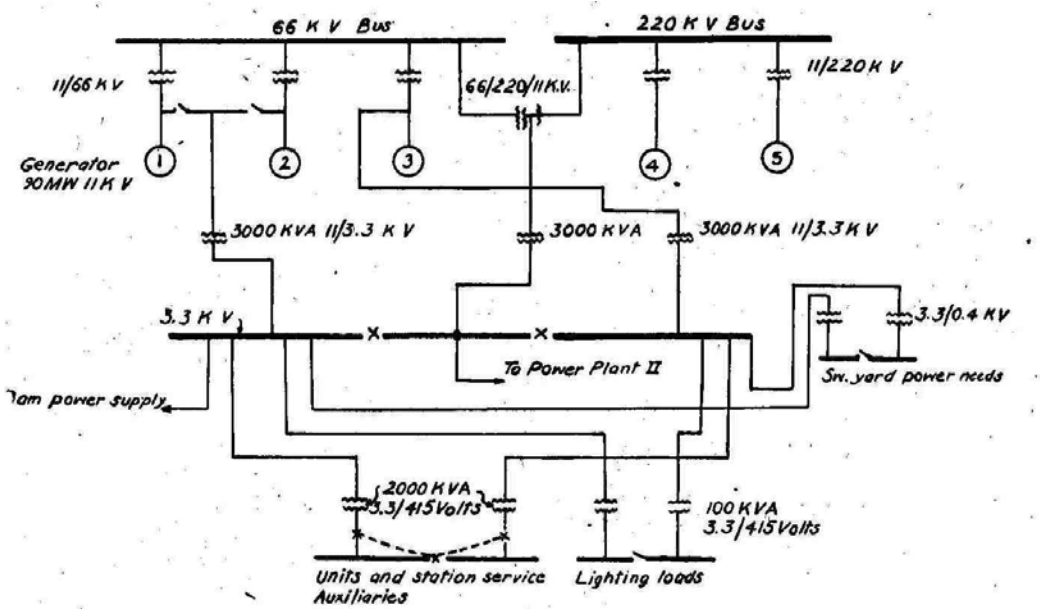

Fig. 1 Bhakra Power Plant I (5 units of 90 MW Each)

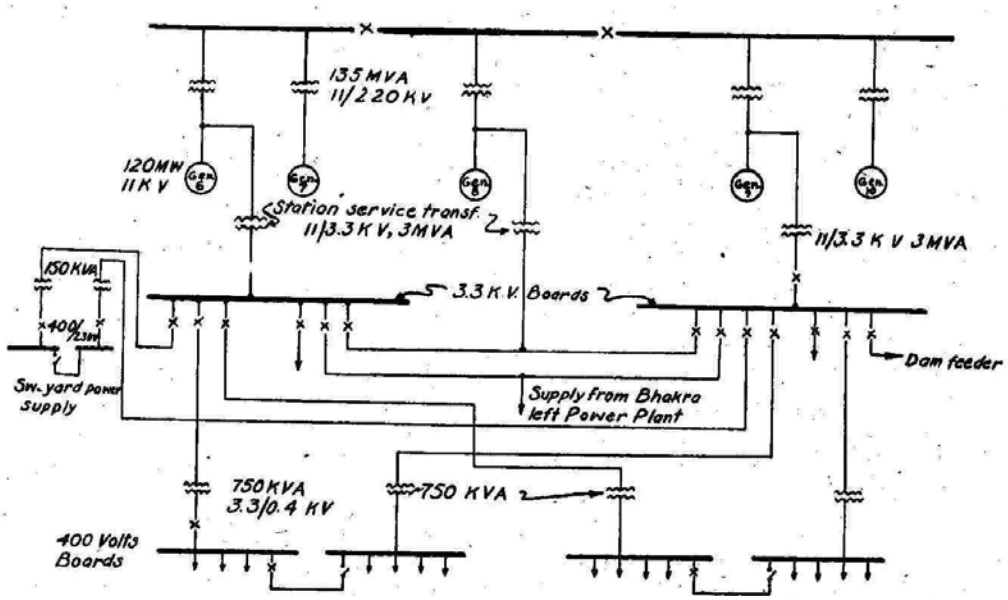

Fig. 2 Bhakra Power Plant II (5 units of 120 MW each)

Fig. 3 shows the basic auxiliary system for the giant Krasnayarskaya power plant in the eastern region of U.S.S.R. The basic system adopted here is a typical unit system. The capacities of unit transformers are quite small and are liable to work at about 70-80 percent of its rating. The station service transformer capacity is also equal to station service needs plus-auxiliaries of one unit. Thus the capacity of transformers installed can be saved upon. This system of auxiliaries has been almost universally adopted in U.S.S.R. in their recent large hydro-electric power plants, e.g. Bratsk – 18 units of 225 MW each (partly commissioned – Fig. 4) and also for Bukhtyarminskaya – 7 units of 72,500 kVA each.

Fig. 5 shows the auxiliary system proposed for Dalles Dam in U.S.A. which has been recently commissioned and contains 22 units of 82,105 kVA each. As can be seen from this

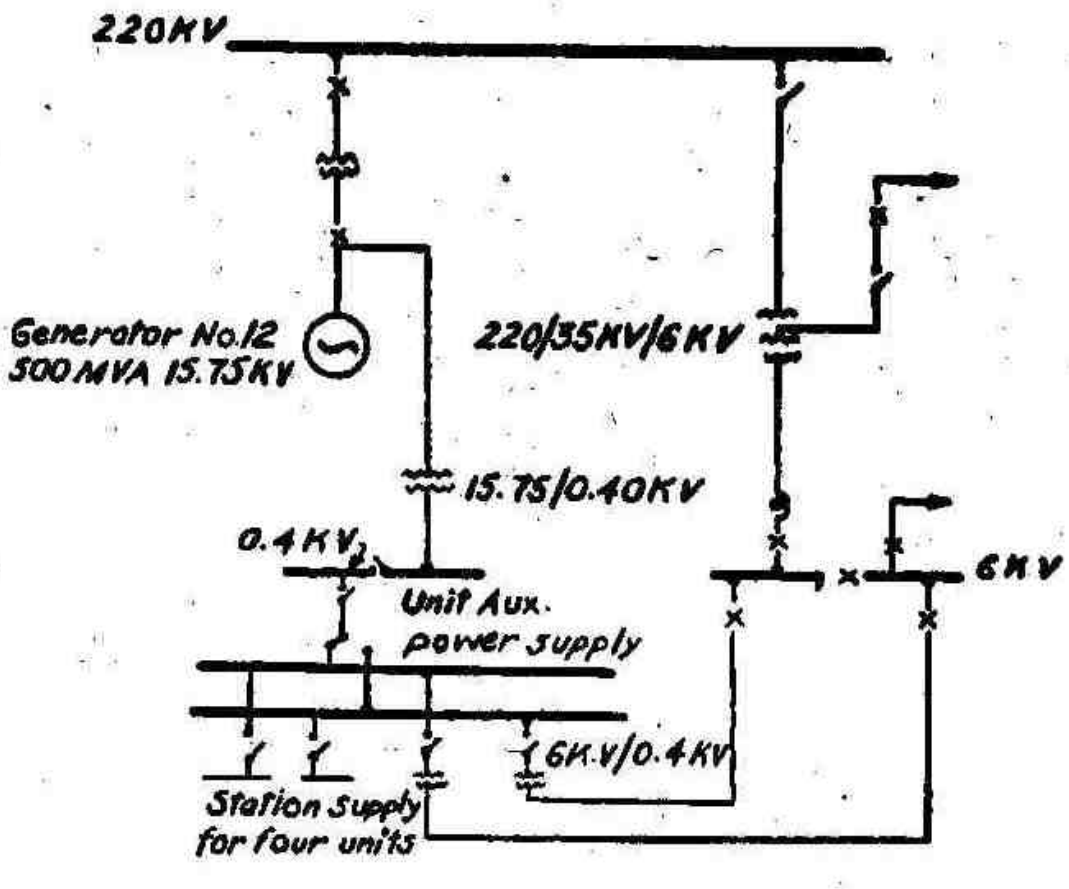

Fig. 3 Basic Auxiliary System for Krasnayarskaya 12 x 500 MVA Station (Proposed in USSSR)

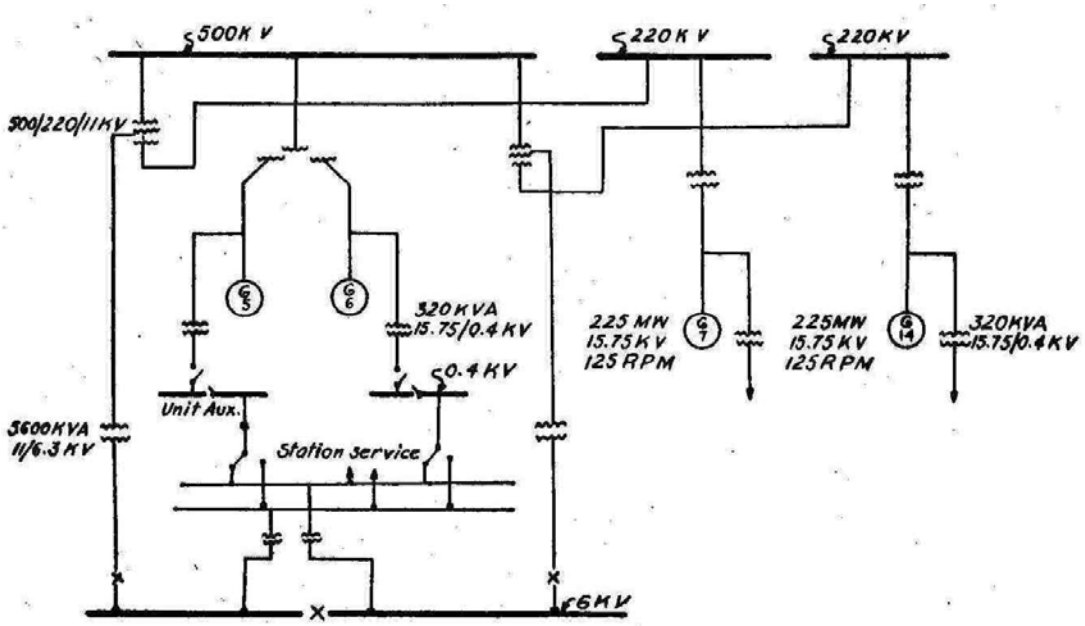

Fig. 4 Basic Auxiliary System for Bratsk Power Station (USSR), 18 Units of 225 MW Each

figure, the primary source of power is by tapping generator leads of units 7 and 8. To limit the interrupting capacity of the breaker on 13.8 kV side, a reactor seems to have been inserted so as to decrease fault level. Double bus-bar for 4160 and 480 V. provides for more reliability and flexibility of operation.

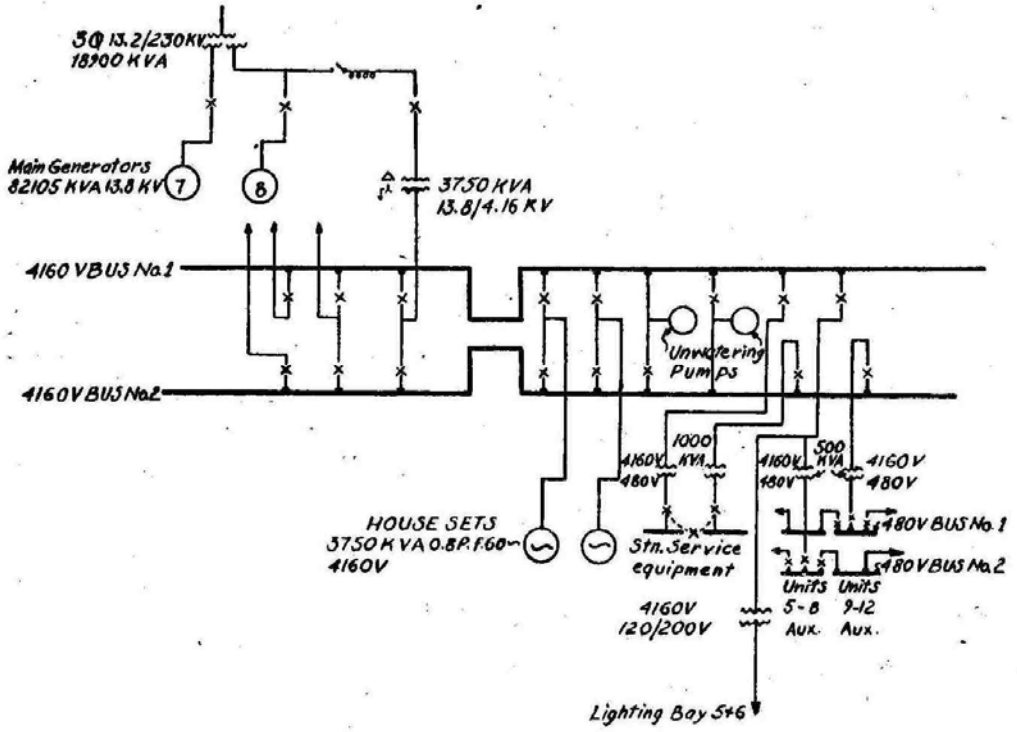

Fig. 5 Basic Auxiliary System for Dalles Dam Power house (USA), 22 Units of 82,105 kVA Each

Electrical Equipment

It may not be out of place to mention here in brief some features for selection of the electrical equipment for power station auxiliaries. In power stations dependency should be placed on sturdy and well-insulated equipment rather than on complicated switching and relay arrangements designed to remove faulty conditions.

High Voltage Switchgear

The high voltage switchgear in power station for 3.3, 6.6 and 11 kV is almost universally specified as air-break switchgear. High degree of safety of air-break switchgear, suitable performance characteristics and high degree of availability combine to make it so acceptable for the job. The fire fighting equipment can therefore be dispensed with. Further absence of current chopping reduces the overvoltages in the system and minimizes outages due to insulation failures. Withdrawable type, cubicle mounted, solenoid operated from the battery is usually specified to be provided. A total opening of approx. 5-8 cycles is usually satisfactory for protection of equipment and for maintenance of system stability under fault conditions.

Low Voltage Switchgear

For low voltage also auxiliaries air-break switchgear is most suitable for similar reasons to those given for the high voltage gear. A combination of switch and high rupturing capacity fuse is used in English practice. But in American and Russian practice only air-break switchgear is used to the almost total exclusion of switch-fuse units.

Motor circuits incorporate in addition contactors with thermal motor protection. For motors of 150 h.p. or more it is preferable to provide circuit breakers instead of contactors.

It has become a frequent practice to centralize the low voltage switchgear together with the motor controls in complete switchboards which are located at convenient points within the power station. With this arrangement means of isolation at the motor are desirable for safety. Another practice is centralization of distribution while contactors and isolators are placed near the motor. In either case important contactors may be controlled from the remote control panels in addition to local control.

Transformers

The transformers in hydro-electric power stations of 3.3 kV and above (for station service) are of standard design and of the oil insulation type with natural circulation cooling for increased reliability. In case of the low voltage transformers for transforming the voltage to 415 V., the present trend is to use dry type transformers so that fire hazard is reduced and the transformers could be located inside the power house building without going into expensive CO_2 fire fighting equipment.

When selecting the transformer reactance consideration should be given to values obtained from a standard design. Higher or lower values can be obtained but may involve increased cost, and when higher circuit reactance values are required consideration should also be given to separate reactors.

Motors

The power station auxiliary motors range in size from fractional horse-power used for control of valves to several hundred horse-power for driving unwatering or unit cooling water pumps. The motors are generally of squirrel cage type with direction-on line starting for quick starting. Starting current for these motors has to be kept within reasonable limits. The motor should meet without difficulty a voltage variation of $\pm$5 percent and frequency variation of $\pm$4 percent. Besides reduction of wider voltage fluctuation (say 75 percent of nominal for 10 min.) and transient voltage dips of greater magnitude during system faults must not affect the operation of the motors.

Cables

Cabling is an important part of auxiliaries installation. The size of cables is determined by the maximum continuous load current. The other factors which influence the size are method of laying, proximity of other cables and ambient temperature. Furthermore, consideration should be given to short-circuit rating for the smaller size as well as voltage drop for long lengths to remote equipment. Table 1 gives the recommended minimum cable sizes for various short-circuit conditions based on a fault duration of 0.25 sec. These sizes can be reduced if fault clearing time is less.

Table 1 – Recommended Minimum Cable Szies (Copper) in Square Inches for Short-Circuit conditions of 0.25 Sec. Duration

Approximate cable size = 0.0135 x t x I_k where I_k = short-circuit current in r.m.s. and t = duration of short-circuit in seconds.

Fault	System voltage			
	415 V.	3.3 kV	6.6 kV	11 kV
15,000 amps.	0.1 sq. in.	-	-	-
25,000 amps.	0.2 sq. in.	-	-	-
50,000 amps.	0.35 sq. in.	-	-	-
150 MVA	-	0.20	0.1	0.06
150 MVA	-	0.30	0.2	0.1
500 MVA	-	-	0.3	0.2

For high tension cables paper-insulated lead-sheathed type are generally used. Three-core cables are satisfactory up to about 0.5 sq. in. conductor size and these are generally armoured for mechanical protection. Oil-less cables should be used for vertical runs of the cable and for this reason varnished cambric-insulated cables are preferred as power cables.

For small loads up to 30 h.p., i.e. including lighting, control, etc., P.V.C. insulated cables are now being used due to the ease and economy of installation. This type of cable can operate in high temperature and is very robust mechanically.

The routing of cables has to be carefully planned at an early stage of power station design to ensure good results from the engineering and aesthetic points of view.

Conclusion

Examination of the auxiliaries system of some of the larger generating stations shows that transformer connected to generator leads is a reliable source of power for station service needs. Unit auxiliary system may advantageously be extended to hydro stations.

The auxiliaries load for very large power stations can be conveniently accommodated on a two-voltage auxiliaries system.

Earthing of the auxiliary system is desirable for rapid isolation of faulty sections. Centralized control of the units is conducive to greater economics. Air-break switchgear for auxiliaries control is preferable. Dry type auxiliary power transformers are desirable.

References

1. Muller, "Auxiliary equipment and system modern practice in power plant", A.I.E.E. Transactions, (1945), 868-72.
2. United States Department of the Interior, Bureau of Reclamation Manual, Volume X, Design Supplement No. 4 – Power Systems.
3. McGreer, T.H., "Grounding of power station 4160 volt auxiliary system", A.I.E.E. Transactions, No. 34 (Feb. 1958).
4. Electrical Power Distribution for Industrial Plants, A.I.E.E. Sub-Committee Report.
5. Bruck, R.H., "Modern control of large hydro-electric generating stations", A.I.E.E. Transactions, (June 1962), 146-52.

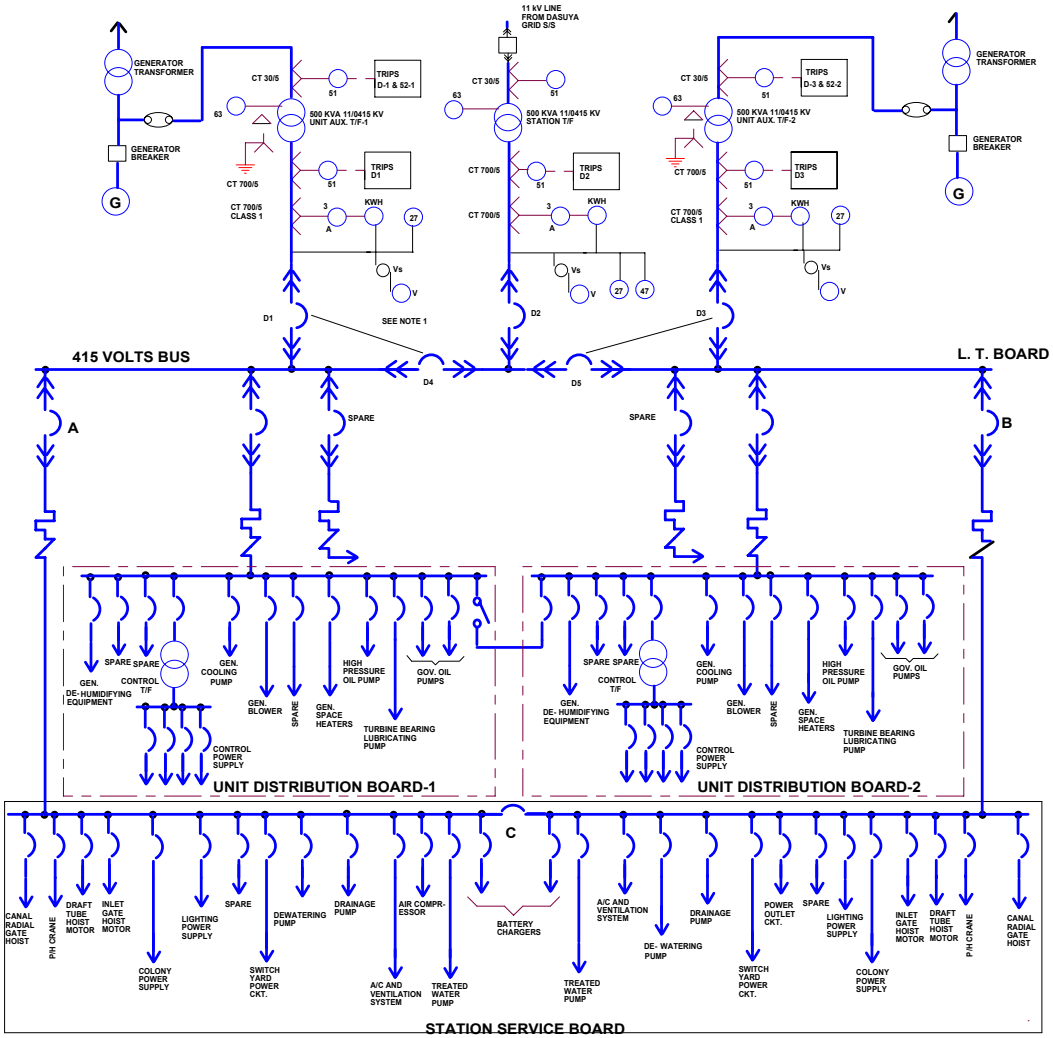

LEGEND

- MCCB
- LIGHTNING ARRESTER
- A — AMMETER
- KWH — ENERGY METER
- V — VOLTMETER
- Vs — VOLTAGE SELECTOR
- 51 — COMBINED OVER CURRENT AND EARTH FAULT RELAY
- 63 — BUCHHOLZ RELAY
- 27 — UNDER VOLTAGE RELAY
- 47 — PHASE SEQUENCE CHECK RELAY
- H.V. BREAKER
- 11 KV LINE SWITCH
- CURRENT TRANSFORMER
- CONTROL TRANSFORMER
- ELECTRICALLY OPERATED CIRCUIT BREAKER
- POWER SWITCH
- SERIES OVERLOAD AND SHORT CIRCUIT TRIP

NOTE

1. BREAKER D1, D2 AND D3 ARE NORMALLY "ON". D4 IS PUT "ON" WHEN D1 IS "OFF" AND D5 IS PUT ON WHEN D3 IS OFF EXCEPT ON FAULT.
2. BREAKER A,B AND C ARE MECHANICALLY INTERLOCKED THROUGH KEY SO THAT BREAKER C CAN BE CLOSED ONLY WHEN A OR B IS "OFF" SO AS TO PREVENT PARALLELLING OF UNSYNCHRONISED SOURCES.
3. ALL CIRCUIT BREAKERS ARE AIR BREAK, DRAW OUT TYPE AND FITTED WITH SERIES OVERLOAD AND INSTANTANIOUS SHORT CIRCUIT PROTECTION.
5. DRAWING IS TENTATIVE AND WILLBE FINALISED ON RECEIPT OF REQUIREMENT DETAILS.
6. SPECIFICATION DWG. NOT FOR CONSTRUCTION

Annexure –3 of 8.2

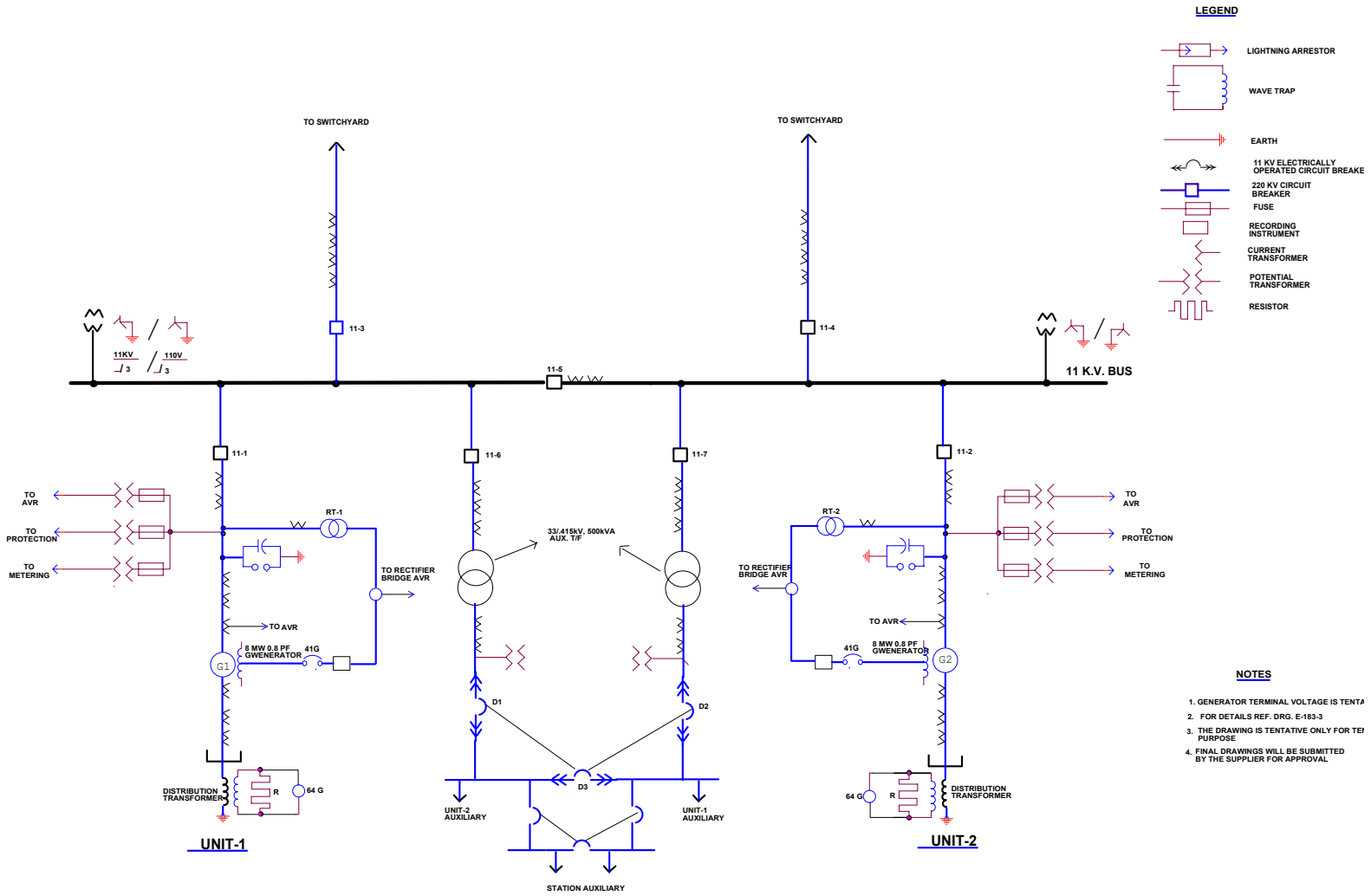

8.3 D. C. AUXILIARY POWER SYSTEM

8.3.1 General

Direct current system in hydro generating stations and step up sub station is provide for following functions.

a) Supply to trip coils and closing coils of switchgear for switching operations.
b) Indication: Indicating lamps, facia, semaphores, alarm and annunciation etc.
c) For energizing the holding and operating coils in control and interlock schemes, and in protection schemes.
d) For power supply to communication equipments and supervisory control.
e) Supervisory control and data acquisition system (SCADA)
f) Emergency lighting including inverter.
g) Generator exciter field flashing

The system consist of a storage battery with its associated eliminator type chargers, providing the stored energy system required to ensure adequate and uninterruptible power for critical power plant equipment. The battery and battery circuits should be properly designed, safeguard maintained, and the emergency requirements should be carefully estimated to ensure adequate battery performance during emergencies.

8.3.2 Battery

8.3.2.1 Type

Type of battery or batteries generally used in hydro generating stations are of the lead-acid type in vented cells or a sealed cell.

Following types of lead acid batteries are commonly used in power plants.

a) Tubular positive plate with pasted negative plate: and
b) Plante positive plate with pasted negative plate.

Plante positive plate batteries are preferred for large hydro station as they have longer life and these cells are suited for applications requiring supply of large currents for short durations as required in unattended stations whereas the cells with tubular positive plates are suitable for the supply of smaller currents for medium to long durations. Use of glass containers is preferable over the other types as these facilitate checking up of sedimentation, electrolyte level, condition of plates, separators etc.

8.3.2.2 Standard

a) Plante Cells - IS : 1652-1984
b) Tubular Cells - IS: 1651-1979
c) IS: 8320 – General requirement and method of tests for lead acid storage batteries.

8.3.2.3 Battery Room

A separate room with lockable doors provides adequate protection against accidental contact or malicious tampering. The room or area should be ventilated in such a manner that exhaust air from the room does not enter any other room in the plant. If necessary, heat should be provided to obtain full rated performance out of the cells. The cells should be mounted in rows on racks permitting viewing the edges of plates and the bottom of the cells from one side of the battery. The tops of all cells should preferably be of the same height above the floor. The height should be convenient for adding water to the cells. Tiered arrangements of cells should be avoided. Space should be provided permitting removal of a cell from its row onto a truck without reaching over any other cells. The lighting fixtures in the room should be of the vapor-proof type, with the local control switch mounted outside by the entrance to the room. Battery charging equipment and controls should not be located in the battery room.

8.3.2.4 Battery Voltage and Number of cells

Rated voltage of the DC control supply for electrical installations can be selected out of the fairly standardized values of 220, 110, 48 and 24 volts. Higher voltage leads to more economical configurations as the total load of the DC system, lengths of circuits and number of DC cables increases. Usually 220 V or 110 V turn out to be the optimum choice.

The voltage of a lead acid cell being 2 volts per cell, the number of cells in the battery would be half of the rated DC voltage adopted.

A separate battery for communication equipment is normally provided. The choice of communication battery, voltage has to be made according to voltage rating of the communication equipment already existing or that to be installed. In the absence of any precedent 48 volts is normally found to be optimum for most installations.

8.3.2.5 One or Two Battery System

Selection of a one-or two – battery system will depend not only on comparative costs of different battery sizes and combinations, including circuits and charging facilities, but consideration of maximum dependability, performance, and flexibility during periods of plant expansion.

Normally two battery system is adopted in hydro power station.

8.3.3 D.C. Loads Classification

Recommended procedure for determining battery rating is outlined in following standards/publications.

a) CBI & P Technical Report No. 79 entitled specification of sub station battery, charging equipment and DC switchyard.
b) IEEE 485 – IEEE recommend practice for sizing lead acid batteries

These standard classify the system load into following categories.

i) Momentary loads
ii) Continuous load
iii) Emergency light load: Duration of light load may be required for duration of 1 – 12 hours.

For hydro stations the following durations are assumed for computation of battery capacity (as per CBI &P Manual) for attended stations.

	Where standby battery is provided	Where standby battery is not provided
Steady and continuous load	3 hours	6 hours
Emergency light loads	1 hours	2 hours

For unattended stations duration may be suitable increased.

8.3.4 Ampere Hour Capacity Calculations

Procedure for calculation battery size as per CBI & P manual is as follows:

a) Classify all loads duration wise after converting them into amperes corresponding to 2 volts per cell applying a reasonable diversity factor to the indicating lamp load.
b) Multiply the current due to each load and their respective duration to arrive at ampere hour capacities.
c) Correct these capacities for rated electrolyte temperature of 27^0C corresponding to the lowest actual site temperature by following equation.

$$\text{Capacity at } 27^0\text{C} = C_t + \frac{C_t \times R \times (27 - t)}{100}$$

Where,

C_t = observed capacity at t^0C
R = variation factor of 0.43% for 10 hours discharge
T = average electrolyte temperature, ^{0}C

d) Convert the AH capacities thus determined with the help of table 3.1 for Plante cells, into capacities referred to the standard 10-hour rate of discharge. Add those capacities to arrive at the total capacity referred to 10-hour rate of discharge.
e) Determine the AH actually in each discharge duration and find out the residual capacity. Reduce the residual capacity left after first discharge duration from that determined for the next discharge duration and continue this process for all the discharge durations. Add the resulting capacity figures to arrive at the total battery capacity.
f) To account for ageing for battery multiply the load expected at end of its service life by 1.25. As the initial capacity of battery rises after some charge-discharge cycles or after some years of float operation, capacity of the battery need be 90 to 95 % of the capacity determined above.

g) To account for unforeseen additions to the DC system and less than optimum operating conditions of the battery due to improper maintenance, the capacity determined above is further increased suitably, by 10-15 %.

h) Capacity of the battery is fixed equal to that commercially available next higher to the capacity calculated in (g).

Table 3.1
Capacities and Discharge Current at 27^0C of
High Discharge Performance Cells at various rates of Discharge

Period of Discharge (hours)	AH capacities as Percentage of Standard Rating		Discharge Current as percentage of Standard Rating		Cell end Voltage (volts)
	8 and 25 AH Plates (percent)	10 AH Plates (Percent)	8 and 25 AH Plates (percent)	100 AH Plates (Percent)	
1.	2.	3.	4.	5.	6.
10	100.0	100.0	10.0	10.0	1.85
9	98.0	98.0	10.9	11.0	1.84
8	95.0	97.1	12.0	12.1	1.84
7	93.3	95.1	13.3	13.6	1.83
6	91.0	93.0	15.2	15.5	1.83
5	88.0	90.0	17.6	18.0	1.82
4	84.0	86.2	21.0	21.5	1.81
3	80.0	81.1	26.6	27.0	1.80
2	73.0	73.8	36.5	36.9	1.78
1	60.0	60.0	60.0	60.0	1.75

8.3.5 **Example** of calculating battery size by the method given in CBI & P manual is given below:

Data

i) Power houses:- Unattended supervisory control
ii) No. of Batteries:- Two – one being standby
iii) Lowest Temperature:- Zero degrees centigrade

D.C. Loads

i) Continuous Load

Continuous load of indicating
Lamps, semaphore indicators,
Relays, discrepancy control switches
and spring charge (of CB) coil - 431 watts (for 6 hours)

(ii) Intermittent Momentary Load

DC Power required for simultaneous Tripping of motor operated beakers - 1936 watts (for 1 minute)

Governor and exciter field flashing etc.

Misc. start stop contactors

(iii) Emergency lighting - 1250 watts (for 2 hours)

Battery Capacity: Assuming 2 Nos. 110 volt batteries are to be provided. The battery capacity required is worked out in table 2.2. Batteries of 100 AH each are required.

8.3.6 Battery Capacity as per IEEE 485

Using the above load classes and durations and battery data (k factor) obtained from manufacturers literature, station battery duty cycle is determined (see IEEE 485). The battery capacity required is determined as the sum of the requirements for each class duration of load comprising the duty cycle.

Table 3.2

Load (Watts)	**Current Amp.** $\mathbf{I = \frac{(l)}{110}}$	**Duration (Hrs)**	**Capacity each Load AH**		**Capacity for individual load at 10 hrs. rate (AH) (table 2.1)**	**Capacity to add (AH) (6 – 10)**	**Total capacity for load (AH)**	**Capacity actually used (AH) (8) – (5)**	**Residual capacity (AH)**
			0^0C	**27^0C**					
1.	2.	3.	4.	5.	6.	7.	8.	9.	10.
431	3.92	6	23.52	26.2	29.8	29.8	29.8	26.2	3.6
1250	11.30	2	22.60	25.2	39.8	36.2	39.8	25.2	14.6
1936	17.60	1/60	0.293	0.33	8.0	-	14.6	0.33	14.27
						66.0			

To account for aging, rise of battery capacity after charger, discharge cycle and possible future expansion capacity required = 66.0 x 1.25 x .9 x 1.25 = 85.0 AH say 100 AH.

Note: The factors are as per CBIP manual on substation chapter -1 entitled, 'Specifications for Battery charging equipment and DC switchgear'. The batteries each of 100 AH capacity is adequate for the power House.

8.3.7 Battery Accessory are Generally as follows:

i) Cell testing voltmeter
ii) Hydrometer
iv) Thermometer
v) Acid jugs for topping up of the cell
vi) Rubber gloves
vii) Rubber apron

viii) Tool box
ix) Battery log books
x) Bridging clamps for cutting out individual cell in the event of defect
xi) Protective goggles

8.3.8 Safety Consideration

Standard rack performance criteria should be evaluated to ensure compliance with plant requirements. Seismic considerations and other factors may dictate the need for special racks and special anchoring needs.

8.3.9 Battery charging Equipment

Static charger sets are preferred for battery charging service. Two sets should be provided so one will always be available. The charger capacity should be sufficient for float operation as well as boost charging capability.

8.3.10 Float Operation Term

This term applies to the method of operation in which battery remains connected to the load and the charger continuously. Voltage of charger is substantially constant and just higher than open circuit voltage of the battery. To keep the battery in a fully charged condition, the charger sends through the battery charging current of a few mili amperes at a voltage which is sufficient to compensate for local action and leakage losses. The magnitudes of the charging current and the voltage should be recommended by the battery suppliers. The charger also supplies the entire DC load under normal condition.

8.3.11 Inverter Sets

Inverter sets should be provided in all plants to supply continuous AC supply for emergency lights as well as for equipment requiring e.g. continuous source SCADA, recording instrument motors, selsyn circuits, and communication equipment. A transfer switch should be provided to automatically transfer the load from the inverter output to the station service AC system feeder in case of inverter failure.

8.3.12 DC Switchgear

For reliability and flexibility, a dc distribution board with several outlets is preferable as this board provides connection of battery and charger to the various load circuits. Each circuit beaker is protected by a fuse and controlled by a switch or circuit breaker which should be suitable for making and breaking inductive loads at voltages upto the maximum floating voltage and not merely the rated voltage. Cartridge fuses are recommended to be used as back up even when circuit breakers with protective releases are installed. The breakers and fuses should be carefully chosen from the consideration of recovery voltage after interruption of faults. The fuses where used should be properly coordinated to ensure operation even for the farthest faults and each circuit should be properly segregated. The dc switchgear should have short circuit rating equal to about 10 times the maximum rated current if the associated equipment, without the current limiting feature on, and about 1.1 times, with the current timing feature ‘on’. However, with the available

standard dc switchgear usually having much higher short circuit ratings (4 kA), the above requirement poses no problem.

8.3.13 A typical DC Single Line Diagram is enclosed as Annexure –1 for medium size 2 unit hydro plant. For large plant unit DC cabinets may be supplied power by duplicate feeders one from each section of DC bus. For smaller hydro separate DC cabinet may be eliminated and fed directly from main DC bus.

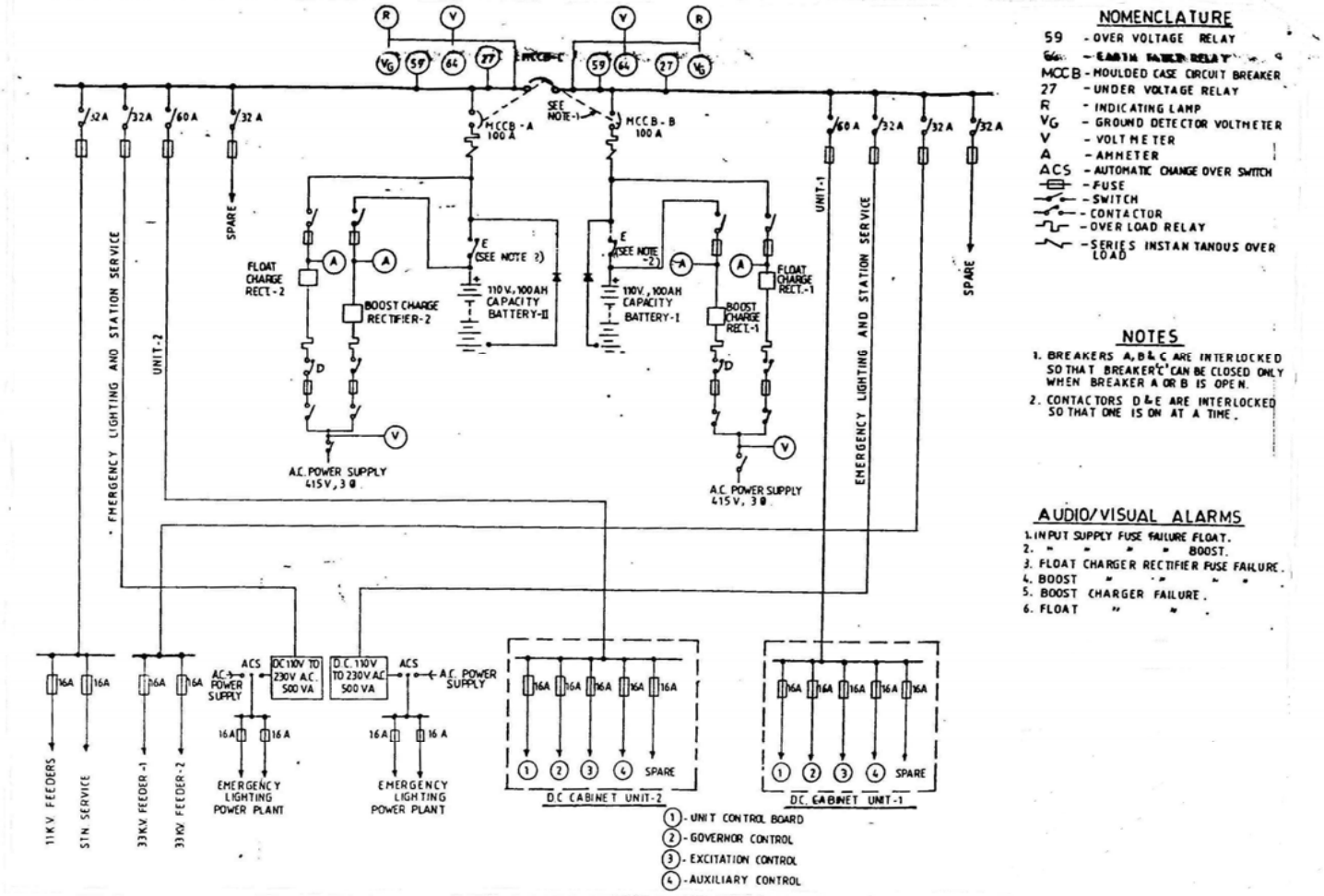
NOMENCLATURE
59 - OVER VOLTAGE RELAY
64 - EARTH FAULT RELAY
MCCB - MOULDED CASE CIRCUIT BREAKER
27 - UNDER VOLTAGE RELAY
R - INDICATING LAMP
VG - GROUND DETECTOR VOLTMETER
V - VOLTMETER
A - AMMETER
ACS - AUTOMATIC CHANGE OVER SWITCH
- FUSE
- SWITCH
- CONTACTOR
- OVER LOAD RELAY
- SERIES INSTANTANOUS OVER LOAD
NOTES
1. BREAKERS A, B & C ARE INTERLOCKED SO THAT BREAKER 'C' CAN BE CLOSED ONLY WHEN BREAKER A OR B IS OPEN.
2. CONTACTORS D & E ARE INTERLOCKED SO THAT ONE IS ON AT A TIME.
AUDIO/VISUAL ALARMS
1. INPUT SUPPLY FUSE FAILURE FLOAT.
2. " " " " BOOST.
3. FLOAT CHARGER RECTIFIER FUSE FAILURE.
4. BOOST " " " " "
5. BOOST CHARGER FAILURE.
6. FLOAT " " "
MCCB-C
MCCB-A 100A
MCCB-B 100A
SEE NOTE-1
SPARE
FLOAT CHARGE RECT-2
BOOST CHARGE RECTIFIER-2
110V, 100AH CAPACITY BATTERY-II
(SEE NOTE 2)
110V, 100AH CAPACITY BATTERY-I
BOOST CHARGE RECT-1
FLOAT CHARGE RECT.-1
A.C. POWER SUPPLY 415V, 3Ø
UNIT-2
UNIT-1
EMERGENCY LIGHTING AND STATION SERVICE
11KV FEEDERS
STN SERVICE
33KV FEEDER-1
33KV FEEDER-2
AC POWER SUPPLY
DC 110V TO 230V A.C. 500 VA
D.C. 110V TO 230V AC 500 VA
EMERGENCY LIGHTING POWER PLANT
DC CABINET UNIT-2
DC CABINET UNIT-1
1 - UNIT CONTROL BOARD
2 - GOVERNOR CONTROL
3 - EXCITATION CONTROL
4 - AUXILIARY CONTROL

8.4 Power and Control Cables and Cabling

8.4.1 Power and Control Cables

8.4.1.1 Standards

IEC: 60502	Extruded solid dielectric insulated power cables for rated voltages from 1.00 kV up to 30 kV.
IEC: 60331	Fire resisting characteristics of electric cables.
IS: 1554 (Part-1) 1988	PVC insulated (heavy-duty) electric cables for working - voltage up to and including 1100 V.
IS: 1554 (Part-11) 1988	PVC insulated (heavy-duty) electric cables for working voltage from 3.3kV up to and including 11 kV.
IS: 7098(Part-11)	Cross-linked polyethylene insulated PVC sheathed cables 1985 for working voltages from 3.3 KV up to and including 33 kV.
IS: 3961	Recommended current ratings for cables.
IS: 8130 -1984	Conductors for insulated electric cables and flexible cords.
IS: 5831- 1984	PVC insulation and sheath of electric cables.

8.4.1.2 DUTY REQUIREMENTS/DESIGN CRITERIA

A. The cables should be suitable for installation in a tropical monsoon area having a hot humid climate. The reference ambient temperature to be considered for the purpose of this specification is 50^0C (depend upon site).

B. The derating factor for the various conditions of installation including the following should be considered while choosing the conductor size:

   i. Maximum ambient air temperature.
   ii. Maximum ground temperature,
   iii. Depth of laying wherever applicable
   iv. Grouping of cables.

C. The allowable voltage drop at terminals of the connected equipment should be maximum 1.0% at full load for choosing the conductor size. In case of squirrel cage induction motors, the cable size should be so chosen that the motor terminal" voltage does not fall below 90% of the rated voltage, at the time of starting, if the motor is started with a D.O.L. starter.

D. The maximum continuous conductor temperature and the maximum allowable conductor temperature during short circuit are taken as 70^0C and 160^0C respectively in case of PVC insulated cables and 90^0C and 250^0C respectively in case of XLPE insulated cables.

E. The minimum size of all 11 kV grade power cables and 415 V power cables connected to circuit breakers are chosen taking into account the following factors.

   i. Fault level due to system contribution.

ii. Fault contribution of running motors.

iii. Expected time up to which motor contribution to fault current persists.

iv. Maximum time for fault clearance (i.e. operating time of the back up protection relay plus the time of operation of the circuit breaker.)

v. Full load current of the circuit.

G. The cables should in general comply with the requirements of the latest revision of IS:7098 (part-11) for the 11 kV grade XLPE insulated cables and IS-1554 (part-1) for the L.T. PVC insulated power and control cables or the relevant IEC Standard. The design, manufacture, installation, testing and performance of the cables, should comply with the latest revisions of IS/IEC/ NEMA/ASTM standard.

H. For 11 kV cables, conductor screen and insulation screen should both be extruded semi-conducting compound and should be applied along with XLPE insulation in a single operation by triple extrusion process. Method of curing for 11 kV cables should “Dry curing/gas curing/steam curing". 11 kV cables should provided with copper metallic screen suitable for carrying earth fault current. For single core armoured cables, the armouring should constitute the metallic part of screening. For 11 kV cables, insulation should be XLPE, while for other cables it should be PVC.

I. Calculations should be made for selection of cables showing type of cable and conductor size selected voltage drop, temperature rise, under rated load and short-circuit conditions, to meet the design requirement.

J. Cable schedule showing the various interconnections and also the routing diagram giving details of various openings are requirement to be prepared.

k. For the sake of reliability, it is required to use only copper conductor cables for the following services:

i. Excitation systems. (Single Core)
ii. Battery and battery chargers. . (Single Core)
iii. Inverters.
iv. All control systems.

l. As far as feasible, separate cables should be provided for circuit of different plant and auxiliaries, for circuits of different voltages, and for circuits used separately. To the extent feasible Power, control and instrumentation circuits should invariably be taken through different routes, which should not be laid together on the same cable tray, otherwise necessary measures should be implemented to avoid the undesirable effects.

8.4.1.3 RANGE OF CABLES

i. Generator- Generator transformer/ Bus Bar connections (used in small hydro plants) should be by armoured power cables of copper conductors with unearthed grade EPR insulation Non PVC jacket HD – HOFR (high density, heat, oil and flame retardant.

ii. 11 KV system - Power cable

The cable should be 11 kV grade, heavy duty, stranded, aluminium conductor, XLPE insulated, provided with conductor screening and insulation screening, galvanised steel wire/strip armoured, flame retardant low smoke (FRLS) extruded PVC of type ST 2 outer sheathed.

iii. 415 V System

The cable should be 1.1 kV grade, heavy duty, stranded aluminium conductor, PVC type. An insulated galvanised steel wire/strip armoured, flame retardent low smoke (FRLS) extruded PVC of type ST1 outer sheathed. Cables may be either single or multi-core or both.

iv. Control cables

The cable should he 1.1 kV grade, heavy duty, stranded copper conductor, PVC type-A insulated galvanised steel wire/strip armoured, flame retardant low smoke (FRLS) extruded PVC of type- ST1 outers, sheathed Cables may be multi-core; depending upon the circuit requirements or both.
Size of control cables should not be smaller then:

a. Control circuits 2.5 mm^2
b. PT circuits for energy measurement 2.5 mm^2
c. CT circuits 2.5 mm^2

v. CO-AXIAL CABLE

Coaxial cable should be steel armoured and should be FRLS type. The cable should have braided tinned copper conductor. The capacitance of the cable be low so as to minimise attenuation in the carrier in the carrier frequency range. The impedance of the cable should be so as to match with the output impedance of the terminals and secondary impedance of the coupling units. The cable should be insulated to withstand a test voltage of 4 kV . Following type of H.F. cables are generally used.

1. Co-axial H.F. cable with 75 ohms impedance (unbalanced)

2. Test voltage in KV – 4 KV RMS for 1 minute

3. Size of conductor – 7 strands/0.4mm

The maximum attenuation at various frequencies is generally as follows

Frequency in KHZ	Attenuation in db/km
60	1.4
300	3.3
500	4.7

8.4.2 CABLING

i) Scope

The complete cable support system should enable proper laying of all power, control, instrumentation and telephone cables, and should provide necessary mechanical protection, ventilation and segregation for them. All hardware and anchoring arrangement should be provided. All steel members should be hot dip galvanised.

Cabling from powerhouse to hydro-mechanical equipment e.g. intake and draft tube gates and gates for power & control from power house. Power and control panels to control panels of hydro mechanical equipment should be properly provided.

ii) Design

Detailed design and calculation should be carried out.

iii) General requirements

No sub zero level cable vault/trenches should be provided below control building/switchgear rooms in main plant and switchyard areas.
Interplant cabling for main routes should be laid along overhead trestles/duct banks/directly buried. However, for tap-offs, same can be through shouldow trenches. Directly buried cable, if essential, should not have concentration of more than four (4) cables. Cables in switchyard area from main plant to switchyard control room are laid in duct bank/cable trenches. In switchyard area, cables are laid in RCC concrete trenches.

Cable entry from outdoor underground/cable routes to the buildings, if any should be above the finished floor level inside the building. PCC flooring of built up trenches should be sloped for effective drainage with sump pits and sump pumps.

Cable trays, support system and pipes.

a)	support system for cable trays	Prefabricated out of sheet steel and fully galvanised flexible type consisting of channels, cantilever arms and associated brackets & hardware, installed at site by bolting or clamping. These should be rigid enough to withstand max. possible loads during and after installation.
b)	Type of cable trays	Cable trap for power cables are perforated. Separate trays are

		provided for control instrumentation cables.
c)	Material of cable trays	Rolled mild steel, min. 2 mm thick for trays and 3 mm thick for coupler plate.
d)	Finish of cable trays	Hot tip galvanised.
e)	Duct banks (if provided)	Heavy duty GI pipes/heavy duty PE pipes (10% spare of each size, subject to min 1) with suitable water-proof manholes. For corrosive areas, pipes should have anti-corrosion coating both inside & outside.
f)	Pipe size	Suitable with 40% fill criteria
	Junction and Pull boxes	Hot dip galvanised sheet steel of 2 mm thickness.
	Cable glands	Nickelchromium plated brass, heavy duty, single compression type for unarmored, and double compression type for armoured cables conforming to BS: 6121.
	Cable lugs	Solderless tinned copper crimping type. For HT cables, lugs should be as per DIN 46329/IS
	HT cable terminations and joints	Proven design and type tested as per VDE 0278. Elastimold or equivalent fully insulated moulded terminations are preferred.
Cable Laying		
a)	Identification tags for cables	To be provided at all terminations, on both sides of wall or floor crossing, on each conduit/duct/pipe entry/exit, and at every 20 m in cable trench/tray or buried run.
b)	Cable tray numbering	To be provided at every 10 m and at each end of cable way & branch connection.
c)	Joints	Joints for less than 250 m run of cable should not be permitted.
d)	Buried cable protection	With concrete slabs; Route markers at every 20 m along the route & at every bend.
e)	Road crossings	Cables to pass through buried RCC hume pipes.
f)	Transformer yard Handling area	RCC trenches to be filled with sand after cable laying
g)	Separation	At least 300 mm between HT power & LT power cables, LT power & LT control/instrumentation cables.
h)	Segregation	All cables associated with the unit should be segregated from cables of other units. Interplant cables of station auxiliaries and unit critical drives should be segregated in such a way that not more than half of the drives are lost in case of single incident of fire. Power and control cables for ac drives and corresponding emergency ac or dc drives should laid in segregated routes. Cable routes for one set of auxiliaries of

		same unit should be segregated from the other set. Segregation means physical isolation to prevent fire jumping or minimum one hour fire rating. In switchyard, control cables of each bay should be laid on separate racks/trays.
i)	Cable clamping	To be suitably clamped/tied to the tray; For cables in trefoil formation, trefoil clamps as provided required.
j)	Fire protection	Fire proof cable penetration seals rated for one hour when cable passes through walls and/or floors. This can be by suitable block system using individual blocks with suitable framework or by silicon RTV foaming system. In case foaming system is offered, damming board, if used, should not be considered for fire rating criteria. Any of the system used should be of proven type as per BS: 476 (Part-8) or equivalent standard.

A. Cables should be laid on overhead cable trays and supports, pulled through conduits/GI pipes and on racks in built up cable trenches and vertical race ways and clamped with aluminium clamps on walls, ceiling and structures and may be directly buried in ground.

B. Cable laying should include termination of power and control cables (i.e on both ends of the cables), at equipment terminals, switchgear, control panels etc. All electrical equipments after installation are completed with cable terminal boxes, cables glands, cable trays, lugs and terminal blocks.

C. All power and control cables are provided with aluminium tag of an approved type, bearing cable reference. Cable routing is done in such way that cables are accessible for any maintenance and for easy identification. Power and control cables are laid in separate cable racks/trays, power cables being on upper most racks/trays. Asbestos sheets are laid beneath power cable where they are running over control cables

D. The racks/trays, in general, are supported at a distance of 1500 mm on horizontal and vertical run.

E. Straight through jointing of cables is avoided. Terminations is done by crimping. Termination kits for the 11kV XLPE insulated cables are heat shrinkable polymeric or tapex type.

F. Buried cables are avoided as far as possible but if necessary it is covered with alternate layer of bricks and sand for mechanical protection. Steel markers are provided at every 20 meters along the cable route.

H. All cables laid on trays/racks are neatly dressed up and clamped/tied to the tray/rack. Suitable Trefoil clamps are provided for single core cables.

7A.5.1 Galvanising

All cable trays and their fittings are hot dip galvanised after fabrication according to IS: 2629 (1968) or relevant IEC. The galvanising should be uniform, clean, smooth, continuous and free from acid spots.

7A.5.2 Support and supporting structures

Angles, flats, channels, hangers, brackets clamps, nuts, bolts and other anchorage material are used for the installation of cables, cable trays, race ways and conduits. All steel members are suitably treated and galvanised or painted with 2 coats of approved paint.

8.4 LIGHTING SYSTEM

8.4.1 General Requirements

A comprehensive illumination system should be provided in the entire project i.e. all areas within the plant boundary. The system should include lighting fixtures, distribution boards, lighting panels, junction boxes, lighting poles, receptacles, switchboards, cables and wires, conduits, poles and masts, etc. The system should cover all interior and exterior lighting such as area lighting, yard lighting, street lighting, security lighting, etc.

8.4.2 Standards

IS : 3646 Code of Practice for interior illumination (illumination glare index)
IS : 694 Wires
IS : 732 Wiring installation conditions
IS : 9537

8.4.3 Design Criterion

The illumination system should be designed on basis of best engineering practice as per IS: and should ensure uniform, reliable, aesthetically pleasing, glare free illumination. The design should prevent glare/luminous patch seen on VDU screens, when viewed from an angle.

Power supply should be fed from 415/240 V normal ac power supply, station service board, and 110 V dc supply for emergency lighting. Lighting panels should be located at different convenient locations for feeding various circuits. These panels should be robut in construction with lockable arrangements and MCB for different circuits.

110 V dc emergency lighting should be provided in following areas:

a)	Generator room	-20 lux
b)	Operating floors of turbine hall	-20 lux
c)	Switchgear room	- 15 lux (min. one lighting fixture

between two rows of switchgear)

d) Control and relay room -100 lux
e) Cable spreader room -at least 10% of illumination (min. one lighting fixture at convenient location.)
f) Battery room -at least 10% of illumination
g) Exit points and stair cases -One light fixture
h) All other strategic locations for safe personnel movement during any emergency.

DC lighting should come on automatically on failure of normal ac supply. These should be switched off automatically after the normal ac supply is restored and luminaries have attained their full glow. In off-site areas/buildings dc lighting is to be provided through self contained 4 hour duration fixtures located strategically. It should be provided with Ni-Cd battery.

Lighting panels, fixtures, receptacles, poles, masts, distribution boards, switch boxes, conduits, junction boxes etc. should be property installed and earthed.

All outdoor fixtures should be weather proof type. Fluorescent fixtures, installed in other than control room areas should have electronic ballasts. For control rooms, the ballasts should be copper wound inductive, heavy duty type, filled with thermo-setting insulating moisture repellent polyester.

All luminaries and their accessories and components should be of the type readily replaceable by the available indian makes. All fixtures and accessories should be of reputed make and non-corrosive type. Acrylic covers/louvres should be of non-yellowing type.
The constructional features of lighting distribution boards should be similar to AC/Dc distribution boards described elsewhere. Outgoing circuits in PLS should be provided with MCBs of adequate ratings.

Wiring should be by multi-stranded PVC insulated colour code cable laid in GI conduits. Wiring for lighting circuits of ac, and dc systems should be run in separate conduits throughout. Minimum size of the wire should not be less than 1.5 sq.mm copper or 4 sq.mm aluminium. Wire should conform to IS: 694 and wiring installation should be as per IS: 732.

Conduits should be of heavy duty type, hot dip galvanised steel conforming to IS: 9537. In corrosive areas, conduits should have additional suitable epoxy coating.

At least one 5/15A, 240 V universal socket outlet should be provided in offices, stores, cabins, etc. 20A 240 V ac industrial type receptacles should be provided strategically in all other areas. All these receptacles should be 3 pin type and controlled with a switch. Suitable numbers of 63 A, 3 phase, 415 V ac industrial type receptacles with control switches should be provided for the entire plant for welding purposes, particularly near all major equipment and at an average distance of 50 m. At least one 63 A receptacle should be provided in each off-site building.

Suitable number of ceiling fans in areas not covered by air-conditioning and ventilation system should be provided.

Street lighting should be with swaged/steeped tubular steel poles of swan new construction. The poles should be coated with anti-corrosive treatment and paint.

Area lighting should be with suitable lighting masts. Masts of adequate height should have lattice structure with ladder, cage and top platform. Alternatively they should have lantern carriage of raise/lower type with electrical winch provided inside the tubular mast.

All outdoor lighting systems should be automatically controlled by synchronous timer or photocell. Arrangement should be provided in the panel to bypass the timer/photocell for manual control.

8.4.4 Illumination Levels And Type Of Fixtures And Luminaries

Location	Average Illumination level (Lux)	Type of Fixture
a) Turbine Hall Operating floor	200	HPSV high/medium bay Industrial trough type fluorescent
b) Switchgear rooms	200	Mirror optics with anti-glare feature
c) Control room, computer room	300	Decorative mirror optics type
d) Offices, conference rooms etc.	300	-Do-
e) Battery rooms	100	Totally enclosed corrosion resistant / vapour proof.
f) Switchyard	10(general) 50 (on equip.)	HPSV flood light, weather proof
g) Compressor room, pump house, etc.	150	HPSV medium bay/industrial trough type fluorescent
h) Turbine, auxiliaries like OPU etc.	150	Flame proof fluorescent fixtures suitable for hazardous area
i) Cable galleries	50	Industrial trough type fluorescent
j) Street lighting roads	20	HPSV street lights
k) Outdoor storage handling	20	HPSV flood light, weather proof.
l)Permanent stores	150	Industrial trough type fluorescent
m) Workshop, general work bench	150	Mirror optics fluorescent
n) Laboratory - General -Analysis area	150 300	Corrosion resistant, vapour proof fluorescent

o) Garage/Car parking	70	Industrial trough type fluorescent

8.4.5 Lumen method of illumination calculations:

Lumen method of illuminance calculation as per IS: 3646 part –I to estimate the illumination produced by the installation in a power house.

$$E = \frac{(\phi \times n \times N) \times U \times LLF}{A}$$

Where,

ϕ - Total quantity of light radiating by a light source per unit time as evaluated photometrically and is given in lumens (lm) by lamp manufacturer for different luminairs i.e. fluorescent tubes etc.

E – illumination on (lumens per unit area) in lux a surface one squate meter in area in lux $\frac{\phi}{F}$ Where F is the area.

n – Number of lamps per luminair
N – Number of luminairs
A – Area to be lit in seq meter (m^2)
U – Utilisation factor
LLF – Light Los Fcator

Example

Control Room Lighting – Control Panel

Lighting Level	-	300 Lux		
Type of lighting	-	2 x 40 W		
Dimension of the lighting	-	13	5	5
(L x B x H)	-	L	B	H
Working palne	-	5.0 – 0.85 = 3.15		
Area of the room	-	65		
Maintenance factor (MF)	-	0.75		
Utilization lumens (UF)	-	0.63		
Output lumens of (2 x 40) W fluoroscent lamp	-	5540		

$$\text{Area of lighting required} = \frac{\text{Area of Room x Lux}}{\text{Lamp Lumen x UF x MF}}$$

$$= 7.449$$

Say 7 nos. of (2 x 40) Watts of twin fluroscent fittings considered

CHAPTER – 9

MECHANICAL AUXILIARIES

GENERAL

The mechanical items of Works of the auxiliary systems electrical including installations should generally fulfill the requirements as given below. All components should be of reliable design.

Bolts, Screws, Nuts etc.: All bolts, studs, screws, nuts, and washers should be as per ISO metric system. Mild steel bolts and nuts should be of the precision cold forged or hot forged type with machined faces parallel to one another. All bolts and studs which will be subject to high stress and/or temperature should be of high tensile material with nuts of appropriate material.

Fitted bolts should be a driving fit in the reamed holes and should have the screwed portion of a diameter such that it will not be damaged during driving. They should be properly marked in a conspicuous position to ensure correct assembly at site.

All parts (other than structural steel work) bolted together, should be spot faced on the back to ensure that nuts and bolt heads bed down satisfactorily. Mild steel nuts and bolts should be zinc or cadmium plated. Stainless steel bolts, nuts, washers and screws should be used for holding renewable parts in water or when exposed to high humidity.

Seals: Rubber seals should be made of synthetic rubber suitable for particular application and should be designed in such a manner that they are adjustable, water tight and readily replaceable. Seals should be manufactured by molding process and not extruded. All adjusting screws and bolts for securing the seals and seal assembly should be of non-corrosive stainless steel.

Oils and Lubricants : Different types of oils, lubricants, etc. should be subject to the written approval of the Engineer. Unless otherwise stated in the Particular Technical Specifications, the oil or grease for bearings, pressure oil systems, transformers, etc., including the necessary quantity for flushing and quantity for first oil change with 20% extra should be obtained.

Piping, Fittings, Valves and Gates

General: All required piping should be furnished complete with flanges, joints, expansion joints, gaskets, packing, valves, drains, vents, pipe suspensions, supports, etc. Flanged joints or connections should be provided only as required for transport, installation or for dismantling and reassembly. Standard metric flanges and connections should be used for all pipe works. Adequate clearance should be given to parallel pipes to allow for easy maintenance without disturbing other lines. All overhead piping should have a minimum clearance of 2.1 m from operating floors and platforms.

All pipes should be supported/restrained/anchored in order to prevent any undue localised stress and deflection/sagging anywhere along the piping length due to the applied forces/moments. For the above purpose standard support attachments such as clamps, saddle plates, braces, angles/cleats, guides etc. and support components such as hangers, rods, turn buckles, spring boxes etc. should be used.

Materials of Pipes & Fittings : Water, air and drain piping less than 25 mm nominal bore should be of galvanised heavy grade to IS-1239, Part-I or equivalent standards steel pipe. Pipes equal to or greater than 25 mm nominal bore should be galvanized heavy grade to IS-1239, Part I/IS-3589 or equivalent.

Oil piping greater than 25 mm nominal bore should be of seamless high quality steel pipe conforming to IS 1239 or API-5L GR.B or equivalent grade as per process requirement, whereas pipes less than 25mm bore should be of stainless steel.

Steel pipes of diameter 100 mm and above for a pressure upto PN 10, may be used in welded type. The minimum wall thickness of pipes should be the "normal" or "standard" wall thickness as per applicable standards.

Pipe Work Fabrication : Steel pipe work smaller than 25 NB and for operating pressure more than PN 10 should be joined by screwed fittings and pipe work for 25 NB and over should be joined by welded flanges. Pipe work for operating pressure upto PN 10 may be joined by screwed fittings upto 50 NB size. Tig welding must be used for fabricating pipe work.

Pipe work Cleaning : Oil pipe work internal bores should be chemically cleaned and passivated prior to use.. Water, air and drain piping should be blown through with high pressure air and flushed with water prior to use.

Pressure Testing : All pressure piping should be pressure tested at a pressure 50% greater than maximum operating pressure after erection and cleaning but before painting at site. The test pressure should be maintained without loss for half an hour.

Painting : All steel piping should be painted on the exterior to prevent rusting. The paint treatment should be of the same system as used for the turbine exterior. Colour coding of pipe work should be adopted as per applicable Indian Standard. Paint damaged during erection and commissioning should be repaired prior to handing-over the plant.

Protection for Transport and Storage : Oil piping should have a protective coating applied to prevent corrosion occurring during transport and storage. The ends of the pipe lengths should be plugged to prevent ingress of water.

Valves & Gates : Generally, valves should be leak-proof in either flow direction (except for non-return valves) when the nominal pressure is applied. All valves with design pressures higher than PN 10 and diameters larger than DN 100 should be workshop-tested for tightness and soundness of materials. Valves should close clockwise and be provided with position indicators/marks on hand wheel. The drive units of motor-driven valves should also be provided with hand wheels for manual operation. To facilitate operation, large valves and gates should be provided with by-pass lines for pressure balancing, if required. Valves spindles and pins should be of stainless steel, spindle nuts and bushes of bronze, the body of cast steel. No valve in cast iron body will be accepted.

All pressure reduction valves; safety valves and similar components should be workshop-tested.

Mechanical Instruments : All mechanical parts of instruments should be suitably protected against shocks and vibrations, heat, humidity and splash water, etc. Pressures gauges should be provided with a damping liquid, e.g., glycerine, to compensate vibrations. Pressure gauges without damping means should not be normally permitted.

Pumps : Materials of the main parts of pumps should be :

- Casing Cast steel
- Impeller stainless steel
- Shaft stainless steel
- Sleeves stainless steel
- Wear rings bronze
- Keys stainless steel
-

The capacity of the driving electric motor should be 15 % higher than the maximum power required by the pump at any operation point The overall pump-motor efficiency for the specified rated head and discharge should not be less than 60%. The pumps should withstand corrosion and wear by abrasive matters within reasonable limits. Shafts sealed by packing glands should be fitted with sleeves. Pump seals should be replaceable without extensive dismantling of the pump. Leakage water should be directed to suitable drainage facilities.

Miscellaneous Metalwork

Except where otherwise indicated elsewhere in the Particular Technical Specifications, the Contractor should supply the following:

- All platforms, ladders, guards, handrails of tubular construction and hatch covers necessary for easy and safe access to Works.
- Safety guards at each point where normal access provision would permit personnel to come within reach of any moving equipment.
- All covers for pipe work, cable trenches and access hatches, required for completing the floors around and over the equipment will be supplied and installed. Unless otherwise approved, floor chequered plates should be of an angular pattern.

9.1 E.O.T. crane

Cranes are used in the power house for operational function and for maintenance and repair. Power house bridge crane (electrical over head traveling crane EOT) is the principal overhead traveling crane for turbines, generators and auxiliaries in typical surface power house.

The crane comprises of main hoist consisting or one or more cranes with combined capacity to lift the heaviest assembly of the generating units. An auxiliary hoist of much lower capacity is provided for handling smaller parts.

Number of Cranes: The choice of providing one or two cranes with a lifting beam is an important consideration in power house because of following reasons especially in power house with large number of units (generally 5 units or more).

i) power house structural costs
ii) construction and erection advantage
iii) 2 cranes with lifting beam will need additional crane clearance and increase in height of power house.
iv) Value of down time

Crane Capacity: Crane capacity should be based conventionally on estimated load and allow at least 10% overload for infrequent special heavy lifts such as generator rotor lifting. The rated load capacity of the main hoist should be capable of lifting the heaviest assembly specified and not less than weight of the generator rotor assembly including poles, shaft and turbine runner.

In case of bulb turbines two cranes are not justified.

Standard: IS: 3177 – 1999 –Code of practice for Electrical Overhead Traveling Cranes and Gantry Cranes
IS: 807 – Structural design of crane

Drawing: Typical power house EOT crane and coverage diagram is shown in fig. 9.1.

For very small power houses, manual monorail hoist may be used.

Typical EOT Cranes Specification for a power house with bulb turbines is given below.

Scope of Supply

- One (1) Power House 60/10T EOT crane complete with Bridge, Operator's Cab, Trolley, Main Hoist, Electrical Controls, safety devices, fittings & connections and all necessary accessories to handle equipments.
- One (1) cradle, slings, etc. for load testing at site.
- One (1) set of main run way rails with base plates, anchor bolts, rail clips, lock nuts end, stops, limit switches, striker plates, etc. for Power House & Butterfly valve cavern (Valve House).
- One (1) set main run away conductors complete with brackets, fittings, inter connecting wiring etc. for Power House & Valve House.
- All special tools, devices, spanners etc. for assembly and installation of cranes.
- Wire ropes, for main hoists and Auxiliary hoists of cranes.
- One (1) set of spares for 5 years of normal operation of cranes.
- Any other items not specified above but are necessary for proper operation of cranes.

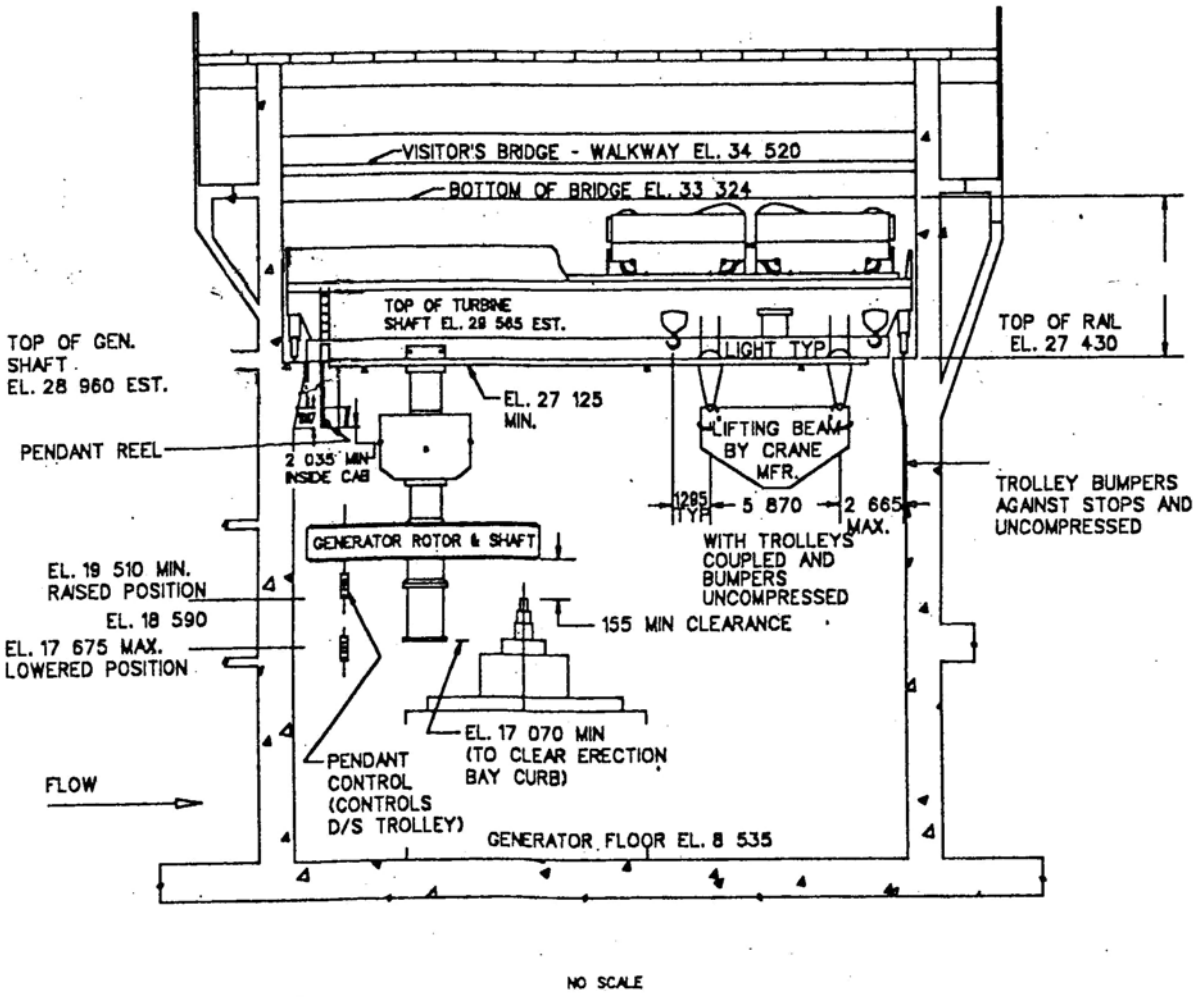

POWERHOUSE E.O.T. CRANE (TYPICAL) CLEARANCES

FIG. 9.1

Design Requirements

All parts of the crane and runway rails should be designed to sustain the loads and the combination of loads listed below with due allowances for eccentricity of loading without exceeding safe permissible stresses. Mechanical parts of the crane including trucks and trolley frames should be designed for the specific loads using a factor of safety of 5 (Five) based on the ultimate strength.

a) Loads:

i. Dead load: The weight of all effective parts of the bridge structure, machinery parts and fixed equipment supported by the structure.

ii. Live load: The weight of trolley and lifted load (rated capacity) considered as concentrated moving loads at wheels in such positions as to produce the maximum moment and shear.

iii. Vertical impact load: 15 (Fifteen) per cent of the total live load.

iv. Braking load: The force produced on sudden application of bridge travel brakes when carrying rated load and traveling at full speed with the power off.

v. Lateral load due to trolley tractive effort: 10 (Ten) per cent of the sum of trolley weight and the rated crane capacity applied equally on the trolley rails.

vi. Longitudinal load due to bridge tractive effort: 10 (Ten) per cent of the sum of the weight of crane and its rated capacity with the lifted load located at the extreme extent of travel of each end of bridge.

vii. Earthquake load: Earthquake force to be taken equivalent to 0.3 g in horizontal direction and 0.14 g in vertical direction.

viii. Other loads: Such as design floor load, special design load for horizontal frame design.

b) Combination of loads: Unless otherwise stated, the crane should be designed to sustain the combination of loads listed below without exceeding the safe permissible stresses.

i. For crane in static hoisting position with dead load, live load and vertical impact load.

ii. For crane in motion with dead load, live load, and any one horizontal load listed under lateral, longitudinal or specific design loads.

iii. For crane in motion with a combination of dead load and braking load.

iv. For crane in static position with dead load plus earthquake load.

v. For crane in motion with dead load, live load and any 2 (two) or more horizontal loads listed under lateral longitudinal or special design loads with resulting unit stresses not more than 33-1/2 (Thirty three and one half) per cent in excess of safe stress.

vi. For crane in static hoisting condition, with a combination of load and forces produced by the maximum or breakdown torque of the main hoist motor with resulting stresses not exceeding 90 (Ninety) per cent of the elastic limit of materials concerned.

9.2 Cooling Water System

Cooling water system may be required in a power house for the following.

i) Generator air coolers and bearing coolers.
ii) Turbine bearing coolers, wearing rings and gland. Turbine glands and wearing ring require water of suitable quality.
iii) Transformer cooling

Water Requirements:

(i) The water flow requirements are determined by generator and turbine suppliers but are dependant on water supply temperature and should take into account extremes in climate conditions for the site. Flow requirements are usually large and require dependable sources. Purity requirements are moderate permitting non potable supplies with limited silt content.
ii) Gland and wearing ring requirements are obtained from turbine supplier. Quality requirements are nominal requiring the removal of abrasive material.
iii) Transformer Cooling: Most plant utilize air cooled transformer. Large transformer are generally OFW i.e. water cooled. Water pressure in heat exchangers is kept less than the oil pressure to prevent water from entering transformer oil. Transformer cooling water system must be protected from freezing where freezing can occur. Requirement of water is obtained from transformer supplier.

SOURCES

Spiral Case – For units with heads upto about 75 m, the preferred source of cooling water is a gravity supply from an inlet in the spiral case spiral case extension. In multiunit plants, an inlet is provided for each unit with a crossover header connecting all units to provide a backup water supply to any one unit. Cross-overs between pairs of units only are not regarded as adequate since there would be no emergency source from an unwatered unit. The spiral case source is usually satisfactory for unit bearing coolers, as well as the generator air coolers, and can be adequate for gland and wearing ring use with proper filtering and adequate head.

(2) Tailwater – For higher head projects, above 76 m (250 ft.), the usual source of cooling water is a pumped supply from tailwater. This normally provides water of essentially the same quality as the spiral case gravity system.

(3) Other sources – It is unlikely that other suitable sources will be available or required for cooling requirements, but alternate sources should be considered for gland requirements. Silt or other abrasive material is usually present in varying degrees in reservoir water, at least seasonally, and since abrasive material is injurious to glands, an alternate source or additional treatment is usually required. The potable water system is normally the best alternate if the supply is adequate or could be economically increased. This would usually be in the case of a well supply requiring little chlorination. Where potable water is used, cross connections from the cooling water source, with backflow protection, should be provided for emergency use.

Head requirements – Normally the cooling water supply should provide a minimum of 68.9-kPa (10-psi) differential across the connection to the individual cooler headers. Available gravity head, cost of a pumped supply, and cost of coolers all enter into an optimum cooler differential requirement and require early design consideration to assure a reasonable figure for the generator and turbine specification. Gland and wearing ring differential head requirements should be obtained from the turbine supplier.

Treatment – Water for coolers, glands, and wearing rings will normally require only straining or filtration. This should be verified from operating experience at nearby existing plants on the same stream. Where existing plants are remote or the project is on a previously undeveloped stream, a water analysis should be the basis of determining the likelihood of corrosion or scale deposits and the need of additional treatment. Typical strainer requirements for coolers permit 3-mm (1/8-in.) perforations, but strainer specifications for existing projects should be obtained as a guide to complete design requirements. Strainers should be the automatic type unless the system provides other backup provisions for continuous water supply or the p. h. is small. Unnecessarily fine strainers requiring more frequent servicing should be avoided. Filters are required for gland water unless the supply is the potable water system. The system should provide for continuous operation when an individual filter requires cleaning.

Pumps – A pumped cooling water supply requires a standby supply for a pump out of service. This can be provided with two pumps per unit, each of which is capable of supplying cooler requirements, or one pump per unit consisting of a common pump discharge header to all units and one or more backup pumps. Other arrangements to provide backup capacity may also be acceptable. Pumps should be located such that flooded suctions occur at minimum tailwater. Continuously rising pump performance curves are required, and the pump should not exceed 1,800 rpm.

Piping -

(1) Design considerations for piping include, velocity, pressure loss, pumping costs, corrosion allowance, equipment connection sizes and requirement, mechanical strength, temperature, expansion etc. .
(2) Water takeoffs from the spiral case or the spiral case extension should be within 30 deg of horizontal center line to minimize debris and air.
(3) A valve should be located as close to the casing as practicable for emergency shutoff.
(4) Balancing valves should be located in cooler supply lines.
(5) A removable 0.9-m (3-ft) section of straight pipe should be provided in the generator bearing supply line for temporary installation of a flow meter.

Typical Cooling Water Systems Specification for a power house with bulb turbines is given below.

Scope of Supply

Tapping arrangement from intake	- 2 sets
Pump Motor Sets	- 3 sets
Motorised self cleaning strainer	- 3 sets
Servo operated hydro valve with solenoids	- 2 sets
Necessary valves, pipes, supports etc.	- 1 lot

General Design and Constructional Requirements

i) Cooling water system should be common for both the units. Cooling water will be tapped from intake upstream of the bulbs of both turbines through embedded pipes and connected to a common header through isolating valves. Three pump motor sets (two mains, one for each unit and one standby) should be used to supply adequate cooling water to generator air coolers and guide bearings of the units. The system should provide 100 % redundancy operation of the unit pumps. Cooling water requirement of one unit should be met by one pump. The third pump should be used as standby pump for both units. Cooling water after passing through strainers will be fed to a common header and distributed to each unit.

ii) The C.W. system will be installed at EL 238.000 and water after passing through heat exchangers should be discharged into tail race at EL 239.000, above maximum TWL.

iii) The pumps should be centrifugal type directly driven by 3 phase 415VAC squirrel cage induction motors. The pump motor should be mounted on common base plate. The impeller of pumps will be made in stainless steel, pump casing in steel casting and shaft in stainless steel. The discharge capacity of each pumps should meet the total requirement of cooling water of one unit.

iv) Motorized self cleaning strainer with discharge capacity 1 ½ times the pump discharge should be provided after each pump to supply silt free clean water to various cooling circuits. The strainers should be cleared off accumulated silt automatically through a motorised rotating arm mechanism. Cleaning operation will be operable through pressure differential switch and timers.

v) Servo operated hydro valve controlled by 110 VDC solenoids or motor operated valve should be provided on feeding line of each unit to control cooling water supply during starting/shut down of units.

vi) Control of the pumps should be built in Unit Control Panels and their starter panels will be located near the pumps.

vii) Valves, Pipes and Fittings : All gate valves and non-return valves should have housing in steel casting and valve seat in stainless steel. Piping should be complete with sufficient number of bends, elbows, tees, clamps, flanges and fasteners.

9.3 Dewatering and drainage System

General

The Dewatering system provides the means for dewatering main unit turbines and their associated water passages for inspection and maintenance purposes. Drainage system provides for the collection and disposal of all powerhouse leakage and wastewater other than

sanitary. The safety of personnel and plant is of vital concern in this system and should have continuing priority throughout the design.

Dewatering System

a. General. The principal volumes to be dewatered in all powerhouses are the spiral case and draft tube. In addition, there is usually a considerable volume down stream of the headgates or the penstock valve.

Dewatering Procedure. Normal procedure after unit shutdown requires: closing of the headgates or penstock valve; drainage of all unit water above tailwater to tailwater elevation through the drain; and spiral case or spiral case extension drain; placement of draft tube gates or stoplogs; and draining the remaining unit water to sump with the sump pumps operating.

Dewatering Time. Aside from safety, the required elapsed time for completing a unit dewatering is the major factor in dewatering system design. Unit downtime will usually be of a value justifying facilities to perform dewatering in 4 hr. or less. This can mean that in a typical plant all necessary valve, gate, and stoplog or gate operations should be done in approximately 1 hr and draining of the pumping system in approximately 3 hr.

Dewatering Sumps. Sump provision in most projects require either joint usage in both the dewatering and drainage systems, or separate sumps with the dewatering sump serving as a backup or overflow for the drainage sump. Sumps should be designed for maximum tailwater head.

Dewatering Pumps. Two dewatering pumps should be provided. Dewatering pump capacity should permit unwatering in 3 hr or less of pumping time with total capacity divided in two pumps of the same capacity. Either pump used alone should be capable of accomplishing the dewatering. Since unit dewatering will not be scheduled under powerhouse design flood conditions, rated dewatering pump discharge should be for a maximum planned tailwater under which dewatering will occur.

Pumps of the deep well water lubricated type are normally used. Submersible motor and pump combinations units mounted on guide rails permitting the pump units to be raised or lowered by the powerhouse crane have also been used.

Generally float-type controls are used for pump control. Automatic lead-lag with manual selection of the lead pump is provided.

Drainage System:

The drainage system handles three general types of drainage as follows: rain and snow water from roofs and decks, leakage through structural cracks and contraction joints, and wastewater from equipment. Discharge is to tailwater either by gravity or by pumping from a drainage sump. Roof and Deck drainage should normally be directly to tailwater by gravity. Drainage of water sprinkler fire protection system if used should be included in the drainage system in the design.

Float Drainage: Drainage galleries should be provided for float drainage and conduits and pipes connecting the trenches to the drainage sump should be provided.

Oil Storage or Purifier Rooms: Oil Storage or Purifier Rooms provided with water sprinkler fire protection system should have chilling drain with a gravel pocket of sufficient capacity to handle the sprinkling system flow.

Battery Room: Battery room floor and sink drains should be of acid resisting material, have a minimum 2% slope.

Miscellaneous Area Floor Drains: Miscellaneous floor areas i.e. turbine room, galleries, machine shop, toilet rooms etc. where leakage rainwater water from disassembly, flushing, etc. is normally expected should have floors with continuous slope to the drain location. Any drains that come from a source that can add oil to the water should not drain directly to tailwater but should first be routed to an oil separator facility.

Pressure wastewater: wastewater from generator air coolers and bearing coolers etc. are normally piped directly to the tailrace. Some powerhouses also require pressure drains for transformer cooling water and air conditioning cooling water.

Drainage Piping: Drainage piping design considerations should be based on relevant on standards. Some of the considerations are given in the cooling water system piping design (Para 9.2).

Drainage Sump: The drainage sump or joint unwatering- drainage sump should be located low enough to provide gravity flow from all drained areas under all dry powerhouse design tailwater conditions and up to the float-operated alarm, sump water elevation.

Typical Drainage and Dewatering Systems Specification for a power house with bulb turbines is given below.

Scope of Supply

- Vertical Turbine Pumps for dewatering - 2 sets
  (Capacity 600 m^3/hr.)
- Level Controller for dewatering pit. - 1 set
- Vertical Turbine Pumps for Drainage - 2 sets
  (Capacity 150 m^3/hr)
- Level controller for drainage pit. - 1 set
- Pipes, valves & fittings. - 1 lot
- Special tools and devices for assembly / dismantling of pumps

Submersible type pump-motor sets of reliable make may be offered as alternative in place of Vertical Turbine pumps.

General Design & Constructional Requirements

i) Dewatering System

For dewatering the underwater parts, there should be a sump whose bottom elevation will be sufficiently lower than the lowest point of the draft tube where the drain box is fitted to permit flow of water by gravity to the sump by opening a long spindle type gate valve provided at the sump. The dewatering will be done first by allowing the water in the intake & the bulb to flow into the tailrace through wicket gates till the water in the intake reaches the tail water level and then by opening the drain valve in the sump for draft tube dewatering after closing the draft tube gate. The dewatering sump should be provided one sealed cover and covered man-hole. The covers, pump base and level sensor's base should be designed to withstand full tail race water pressure.

Dewatering system should consist of two numbers vertical turbine pumps (one main & one standby), one set of level controllers, pipe lines and valves. Each pump should be capable of dewatering the turbine in 4-5 hrs. Level controllers should be provided in the dewatering sump to start/stop the pumps automatically & to give alarm at a preset level. Leakage of water from intake & D.T. gates may be assumed as 0.15% of rated discharge of turbine. Both the pumps should discharge into a common discharge pipe after the gate valves and non-return valves. Suitable wall mounted control panel with starter, etc., should be supplied.

ii) Drainage System

A separate drainage sump will be made available so as to permit drainage of water by gravity into this sump. The water from the drainage sump should be discharged into the tailrace above the maximum tailrace water level. Both the dewatering and drainage sumps should be inter-connected through a gate valve and non-return valve to allow rising water in the drainage sump to be drained into the dewatering sump on failure of both drainage pumps to cope with station drainage water.

The drainage system (common for Power house) should consist of two vertical turbine pumps (one main & one stand by), one set of level controllers, pipe lines and valves. The pumps should be of adequate capacity to remove normal seepage & drainage water but not less than 150 cu.m/hr. The electric motor, pipes & valves should be suitable for the pump rating. Automatic control of the pumps should be arranged through level electrodes. Provision for manual operation should be made on the control panel.

The dewatering & drainage pumps and level sensors should be installed at EL 238.000 and the water should be discharged into tail race at EL 239.000, above maximum TWL. Control of the pumps should be built in Unit Control Panels and their starter panels will be located near the pumps.

iii) Pump – Motor Sets

The impellors of pumps should be manufactured from stainless steel and the casing of impellor from steel casting. The pump casing and impellors should be provided with removable type of stainless steel liners. The shaft should be of alloy steel with stainless steel sleeves where it passes through bushes. The electric motors should be

squirrel cage induction motors with hollow shaft and ratchet arrangement to prevent reverse rotation. The enclosure of the motors should be drip proof type.

iv) Valves, Pipes and Fittings

All gate valves and non-return valves should have housing in steel casting and valve seat in stainless steel. Piping should be complete with sufficient number of bends, elbows, tees, clamps, flanges and fasteners.

9.4 Compressed Air System

Compressed air system are required in powerhouse for operation and to facilitate maintenance and repair. Service air, brake air and governor air comprises the three systems needed in all powerhouses. Reliability, flexibility and safety are prime design considerations.

9.4.1 Brake Air System

a. **General .** The brake air system comprises one or more semi-independent storage and distribution installation for providing a reliable of supply of air to actuate the generator braking systems. Air is supplied from the service air system, stored in receivers, and distributed through the governor actuator cabinets to the generator brake systems.

b. **Air Requirement.** Air is required in the system to stop all generator-turbine units simultaneously without adding air to the system and without reducing system pressure below 520kPa (75 psi). Storage capacity and pressure depends upon number of brake applications per stop, brake cylinder capacity and volume required for piping and verified by generator manufacturer.

c. **Piping-Receivers**. Each subsystem includes a receiver, piping from the service air system to the receiver, piping from the receiver to the governor cabinets, and piping from each governor cabinet to the respective generator brake system normally.

d. **Control**. Control for application of the brakes is normally included in the governor cabinets and provided by the governor supplier.

9.4.2 Governor Air System

a. **General.** The governor air system provides the air cushion in the governor pressure tanks. When the governor system is to be placed in operation, the pressure tank is filled approximately one-fourth full with oil, and the tank is then pressurized to governor-operating pressure from the governor air system. Corrections to maintain the proper oil-air ratio are required at intervals during plant operation. The governor pressure tank size and operating pressure will be determined by the turbine servomotor volume.

b. **Air requirements. i) Quantity:** Compressor delivery should be sufficient to effect a complete pressurization of a governor tank with the proper oil level in 4-6 hr. **ii) System Pressure.** The operating pressure should be approximately 10% above the rated governor system pressure. **iii) Compressor.** The total air-delivery requirement should be provided by two identical compressor, each rated at not less than 50% of the requirement. Compressor should be heavy duty, reciprocating, water or air cooled, and rated for continuous duty.

9.4.3 Service Air System

a) **General**. The service air system is a nominal 700-kPa (100-psi) system providing air for maintenance and repair, control air, hydropenumatic tank air, charging air for the brake air system, and in some cases, air for ice control bubblers.

b) **Service Air Requirement**. **i) Routine Maintenance.** Supply 25-40 L/s (50-80 cfm) for wrenches, grinders, hammers, winches, drills, vibrators, cleaning, unplugging intakes and lines, etc. **ii) Major Maintenance and Repair.** Supply 140-190 L/s (300-400 cfm) for sandblasting, painting, cleaning etc. Normally this capacity should be provided with portable equipment. For projects too remote from a government or commercial source of temporary portable equipment, installed capacity be provided. **iii) Ice Control Bubblers.** Supply 1-2 L/s per 3-m (2-4 cfm per 10 ft) width of trashrack with bubblers opaerting on intakes for upto four units simultaneously (if required). **iv) Operational Requirements.** Supply 7-12 L/s (15-25 cfm) with individual assumption as follows:

- Brake system charging air
  1-2 L/s (2 – 4 cfm) per unit
- Hydropenumatic tank
  3-5 L/s (5 – 10 cfm) per unit
- Control Bubbler
  1-3 L/s (2 – 5 cfm) per unit
- Leakage
  1-3 L/s (3 – 5 cfm) per unit

v) Standard Provision Basis. It is found that the computed basis will usually require several arbitrary assumption and service factors to arrive at a total service air requirement. in lieu of the compound basis, the following standard provisions may be used as the basis of total air requirement:

- 1 – 2 unit plants 40 L/s (75 cfm)
- 3 - 4 unit plants 50 L/s (100 cfm)
- Over 4 unit plants 60 L/s (125 cfm)

In addition, provide 175 L/s (375 cfm) for major maintenance and repair. If this will be supplied with portable equipment, add computed ice control bubbler requirement to the above standard provisions. If the 175 L/s (375 cfm) is to be installed, assume that ice control and major maintenance will be nonsimultaneous requirements, and the 175 L/s (375 cfm) will cover the ice control bubbler requirements.

v) Service Air Pressure. A nominal 700-kPa 9100 psi) pressure with system variations from 580-760 kPa (85 – 110 psi) is satisfactory.

c. Compressors. Compressors should be heavy duty, water cooled, flood lubricated, and cooled rotary screw type rated for continuous duty. Normally, aside from major maintenance, service air should be supplied by two identical compressors each of which is capable of supplying approximately 75% of the requirement. where ice

control bubbler demand exceeds 12 L/s (25 cfm) and there is no installed major maintenance compressor, it will usually be preferably to supply the bubbler demand from separate compressor. Installed major maintenance and repair capacity should be provided with a single compressor.

d. Receivers. Each air receiver should conform to design construction, and testing requirements of the ASME, " Boiler and pressure Vessel Code." Receiver capacity should provide a minimum 5 min-running time with no air being used from the system for the largest connected compressor on automatic start-stop control. One or more receivers may be used for the system. However, galvanized receivers are preferred, and sizes should be checked against galvanizing plant capabilities.
e. Controls. The two service air compressors should each be provided with selective manual or automatic control. They should have pressure switch lead-lag control automatic selection and conventional load- lag control automatic selection and conventional load-unload operation for manual selection. A major maintenance compressor or a separate ice control bubbler comprssor should be on manual control with conventional load-unload provisions. Cooling water should be controlled to flow only when the compressor motor is energized. Automatic shutdown should be provided for low oil pressure, low oil level, and high-discharge air temperature.

9.5 FIRE PROTECTION SYSTEM

9.5.1 General

Arrangement of fire protection in hydro power station is normally divided into following three groups.

i) Fire protection for generators
ii) Fire protection for generator transformers
iii) Fire protection of area and equipment and power house not covered under above two groups.

Standard

IS 3034 – 1981 – Code of practice for fire safety of industrial buildings electrical generating/distribution station.

9.5.2 Generators

a. General: Generators with closed air-circulation systems are normally provided with automatic CO_2 extinguishing systems. Up to four generators may be on one system, with CO_2 cylinder storage based on discharge in a single unit.
b. System design:

(1) General design considerations are as follows:

(i) CO_2 concentration of 30 percent should be maintained within the generator housing for a minimum period of 20 min without the use of an extended discharge.

(ii) CO_2 release should be actuated by the following:

- Generator differential auxiliary relay
- Thermo-switches in the hot air ducts of each air cooler.
- Manual operation at the cylinders.
- Remote manual electrical control.

The CO_2 fire extinguishing system normally consist of a sufficient amount of CO_2 to maintain an inert atmosphere during the deceleration of the machine. Two rates of discharge of CO_2, are provided by two groups of CO_2 cylinders one group of cylinders, providing the initial discharge, to ensure a rapid build-up of CO_2 concentration, to put out fire and other group of cylinders, providing the delayed discharge to ensure concentration of CO_2 maintained for an extended period. Capacity of the bank is sized for protection of only one individual generator and CO_2 cylinders is arranged for the discharge to any one of the main units. The amount of CO_2, for initial and delayed discharge, should be determined by the manufacturer, taking into account the volume of the air spaces in the generator enclosure and the deceleration time of the machine. Size and the number of cylinders required in each bank are accordingly determined. A set of identical reasons set of cylinders is provided for immediate replacement after use.

c) Refer to Figure 9.4.1 for a typical CO_2 fire protection system and Figure 9.4.2 its control.

d) For bulb generators water sprinkler system is used.

Transformers

a. General: Fire protection at a transformer is provided to limit damage to other nearby transformers, equipment, and structure. It is assumed that a transformer fire will result in loss of the transformer. Water sprinkler systems are provided for outdoor oil-filled transformers and CO_2 systems for indoor oil-filled transformers.

b. Outdoor transformers:

(1) General: Main power transformers are commonly located outdoors, on intake or tailrace decks, in the switchyard, or on an area adjoining the powerhouse upstream wall. They are sometimes individually semi-isolated by walls on three sides. The frequency of transformer fires is extremely low, but the large quantities of oil involved and absence of other effective fire control measures normally justify installation of a deluge system where there is a hazard to structures.

(2) System design:

(i) The system Emulsifier Water Sprinkler System. Deluge valves should be actuated automatically by a thermo-stat, manually by a switch in a break-glass station located in a safe location near the transformer, or manually at the valve. Where exposed transformers (without isolating walls) are located closer together than the greater of 2-1/2 times transformer height or 9 m, the system should be designed for spraying the adjoining transformers simultaneously with the transformer initiating deluge.

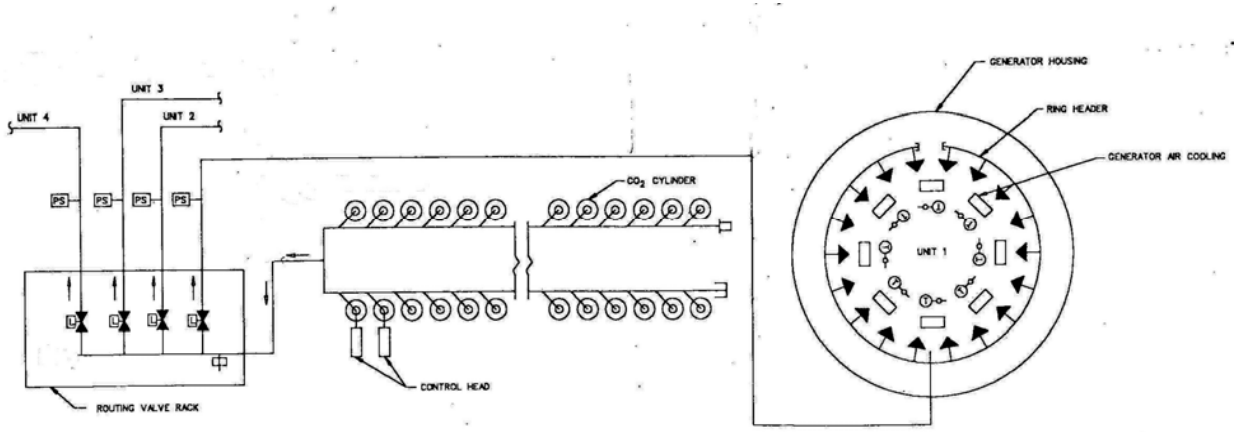

SYMBOLS	
PS	PRESSURE SWITCH
T	THERMOSTAT ELECTRIC
	CO_2 DISCARGE NOZZLE
	FIRE DOOR TRIP
	AIR SUPPLY DAMPER TRIP
	AIR EXHUAST DAMPER TRIP
	ROUTING VALVE WITH LOCKING DEVICE
	HEADER SAFETY RELEASE DEVICE
	CO_2 PRESSURE BLEEDER
	GATE VALVE
	FIRE DOOR
	DISCHARGE INDICATOR
	PIPE CAP
CPD	COMBUSTION PRODUCTS DECTECTOR
	BALL CHECK VALVE
BGS	BREAK GLASS STATION

Fig. 9.5.1 Generator CO_2 Fire Protection (4 unit)

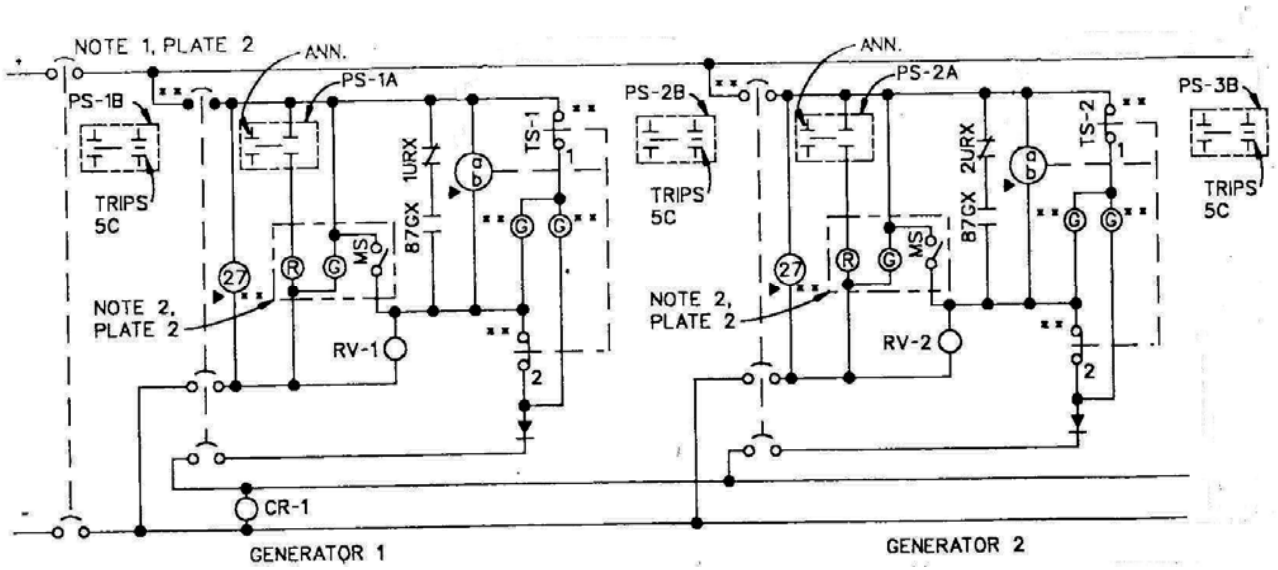

Fig. 9.5.2 Generator Protection Control System (typical)

SYMBOLS	
CR	CYLINDER RELEASE
PS	PRESSURE SWITCH
TH	THERMOSTAT
TS	CIRCUIT CONTINUITY TEST SWITCH
TDC	TIME DELAY CLOSE
ANN	ANNUCIATOR CONTACT
5C	COMPLETE SHUTDOWN RELAY
	TIMING RELAY RESET-TEST SWITCH
	CONTACT
	BLOCKING DIODE
PS	PRESSURE SWITCH
	DISCHARGE NOZZLE
	ALARM BELL
R	RED INDICATING LIGHT
G	GREEN INDICATING LIGHT
	INDICATES SEVERAL CONTACTS IN PARALLEL
MS	MANUAL SWITCH IN EMERGENCY BREAKGLASS STATION
RV	ROUTING VALVE RELEASE
TR	TIMING RELAY
URX	UNIT RUN AUXILIARY RELAY
27	UNDER VOLTAGE RELAY
B7GX	GENERATOR DIFFERENTIAL AUXILIARY RELAY
**	LOCATED IN CO_2 CONTROL CABINET
	SHUNT TRIP
	2 POLE CIRCUIT BREAKER
RV	ROUTING VALVE (AUTOMATIC OPENING)
	CHECK VALVE
	PRESSURE OPERATED RELEASE (TRIP)
	LEVER OPERATED PLUG VALVE

(ii) The water sprinkler system system water supply is normally from the pool or water tank and should be a gravity supply if practicable. A booster pump should be provided if required. a pumped tailwater source is an acceptable alternate. Two water intakes are required either of which can supply the rated delivery of the pump. Consideration must be given to providing a source of power for pumping when the circuit breakers supplying the transfer are automatically tripped because of a transformer fault.

c. Indoor transformers: Oil-filled indoor transformers should be protected by CO_2, auxiliary transformers installed.
d. Outdoor oil-insulated: Oil-insulated power transformers located outdoors should be provided with chilling sumps which consist of a catchment basin under the transformer filled with coarse crushed stone of sufficient capacity to avoid spreading an oil fire in case of a tank rupture.

Portable Fire Extinguishers

Portable CO_2 handheld extinguishers are the first line of fire protection for powerhouse areas and equipment other than those specifically covered above and should be provided in locations as per relevant Indian Standard.

Fire Detections

a. Thermal detectors: Thermal detectors are best suited for locations within equipment such as generators or near flammable fluids.
b. Ionization detectors: Ionization detectors are best suited for gases given off by overheating, such as electrical cables or a smoldering fire. Location near arc-producing equipment should be avoided. They are not suited for activating CO_2 systems.
c. Photoelectric detectors: Photoelectric detectors are best suited for the particles given off by an open fire as caused by a short circuit in electrical cables. Their use in staggered locations with ionization detectors along a cable tray installation would provide earliest detection. They are not suited for activating CO_2 systems.
d. Location: Detectors should be located at or near the probable fire source such as near cable trays or in the path of heating and ventilating air movement. In areas where combustible materials are not normally present, such as lower inspection galleries, no coverage may be appropriate.
e. Reliable detection: The earliest “reliable” detection is required. The detector type or types, location and adjustment should be carefully considered. The detector sensitivity adjustment should be adjusted to eliminate all false alarms. A fire detector system should be provided in the cable gallery and spreading rooms of all powerhouse.
f. Alarm system: The power plant annunciation and, if applicable, the remote alarm system should be used to monitor the fire detection alarms. An alarm system should be provided for each area. Properly applied, these systems will provide more reliable and useful alarm data than the alarm monitor specified in the fire codes.

Isolation and Smoke Control

Smoke and fire isolation is probably the most important fire control item. Smoke inhalation is one of the major causes for loss of life. The toxic fumes from a minor fire could required total evacuation of the powerhouse. Many of the existing heating, ventilating, and air conditioning systems contribute to spreading the smoke as they encompass the entire powerhouse or have a vertical zone composed of several floors. The fire area should be isolated by shutting down the ventilating system or exhausting the air to the outside where feasible to prevent the spread of smoke and to provide visibility for fire fighting reentry to the area. In most cases, the available oxygen is sufficient to support combustion, and little can be gained by not exhausting the smoke. Smoke and fire isolation should be provided in areas where isolation can provide a real benefit. The requirements for fire stops should be considered on a case-by-case basis. Where cable tray pass through a floor or wall which could be considered a fire wall, or where cables leave a tray and enter a switchgear or switchboard through a slot, a fire-stop should be considered. A 12.7 mm asbestos-free fireproof insulation fireboard can provide the basic seal with the voids being closed by packing with a high-temperature ceramic fiber. Single conduit or single cables which penetrate a fire wall can be sealed with a special fitting. Thick seals should be avoided as they could contribute to an excessive cable insulation operating temperature.

9.6 VENTILATION AND AIR CONDITIONING

9.6.1 General

Power house and ventilation and air conditioning is required to maintain temperature and quality air conditions suitable for operating requirement, plant personnel and visitors. Ventilation and air conditioning system for surface hydel power stations should be designed in accordance with IS: 4720 – 1982 entitled code of practice for ventilation of surface hydel power stations as given below.

9.6.2 Types of Ventilation

The ventilation may be of following types:

a) Natural, that is, by forces set in motion by the heat of sun, namely, winds; and
b) Forced or artificial, that is, by extraction or propulsion.

9.6.3 GENERAL RULES FOR DESIGN

9.6.3.1 Natural Ventilation

i) Thorough ventilation of power house building should be aimed at by the provision of adequate windows and ventilators.
ii) Provision of Windows and Ventilators - The object of providing windows and ventilators is two-fold, that is, to get fresh air and light. The minimum area of windows and ventilators to be provided in power house building should be one-tenth of the floor area. However, efforts should be made to increase it to one-fifth of the floor area. Windows should be well distributed and be located on windward side at low level arid should not, as far as possible, be obstructed by adjoining

structures or partitions. When wind direction is variable, windows should be provided on all sides, if possible. Effort should be made to develop cross-ventilation. For protection against fire, it is preferable to provide steel doors and windows in power house and auxiliary rooms. Reference may be made to IS :1038-1975f and IS :136l-1978J. The ventilators should be fixed as high as possible for proper expulsion of warm air. Full advantage should be taken of sunshine which is important in ventilation its availability depends on the orientation of the power house which in turn may depend on site condition. In providing openings, measures to guard against entry of birds, moths, etc, should be taken.

9.6.3.2 Forced Ventilation

i) Forced ventilation system is designed keeping the inlet fan capacity 10 percent more than the exhaust fan capacity.

*Code of practice for industrial ventilation (first revision).
Steel doors, windows and ventilators (second revision).
Steel windows for industrial buildings (first revision).

iii) Unassigned rooms and storage rooms should be carefully considered, so that sufficient ventilation may be provided in those which might be used for purpose requiring additional ventilation in the future.

iv) In portions of the power station building where moisture condensation is anticipated, dehumidified air should be supplied to prevent condensation, as condensation causes deterioration of point, corrosion of metal surfaces and breakdown of insulation on electrical equipment.

v) The quantity of air required for the power station building should be worked out from the number of air changes preferred for the various premises of the building as given in Table 1. In addition to this the points given in 3.2.4.1 to 3.2.4.9 should also be kept in mind.

TABLE 1 PREFERRED NUMBER OF AIR CHANGES

POWEU HOUSE PREMISES	PREFERRED AIR CHANGES PER Hour
Main generator room, dark room, light and heavy storage rooms, dewatering and drainage sumps, record room	2
Passage, approach gallery, pipe gallery, ventilation equipment room, governor gallery, cable gallery, dewatering drainage-pump room or gallery	4
Oil storage and oil purification rooms, service (pump) gallery, oil sludge room, compressor room, terminal board room, machine shop, tool room, pipe	6

shop, electrical laboratory, fan room, battery room, telephone and communication equipment room	
AH offices, reception room, toilets, shower, 8 kitchen, first-aid room and control room	8

vi) One air change per hour means that the quantity of air equivalent to the total volume of the room is supplied to and exhausted from the room each hour. This air may be all outside air or a part of the-circulated air, depending upon the oxygen content.

vii) The proportion of outside air to the circulated air supplied to a room depends upon temperature conditions, number of occupants and kind of equipment installed in the room.

viii) The number of air changes per hour provided for any room is dependent upon the number ofoccupants. The air should be changed at the rate of l'5m^s/min per person and not less than 0*3m^s/niin of this air should come from outside sources.

ix) The number of air changes per hour provided for rooms containing equipment generating heat should necessarily be increased, depending on the amount of heat to be carried out by the ventilating system.

x) For medium climates, the maximum temperature rise of air carrying off heat of transformers should be limited to 20°G, and for hot climates the temperature rise should be limited to 16°C ; however, the final temperature of the air exhausted should not exceed 45°C.

xi) Air supplied to rooms containing special mechanical or electrical equipment should be filtered aridcirculation maintained at a minimum, through diffusers, to prevent the accumulation of dust on sensitive mechanisms. The relative humidity of air supplied should not be higher than 65 percent.

xii) Rooms which may contain air contaminated with objectionable or harmful odours, carbon dioxide gas or smoke, should be exhausted directly to the outside of the building.

xiii) When heating or cooling units are provided in the power house, their effect on the quantity and temperature or air circulating through the building should be considered.

xiv) The spacing of supply and exhaust openings in long rooms or galleries should be such that sufficient air changes per hour are provided along the full length of the room.

9.6.4 FANS

Forced air ventilation is provided by propeller, axial or centrifugal type fans powered by electric motors. Propeller fans may be used either to supply or exhaust where no duct system, filters or other restrictions are in the air passage. When duct system is used, axial or centrifugal fans may be used for any type of operation involving the movement of air and may be accompanied by filters, and coolers or heaters where cleaning and tempering of supply air is required. Choice of a particular type of fan may be made by consulting the fan manufacturers data, which give full operating characteristics with a preferred range of operation for a particular fan.

9.6.5 AIR INTAKE AND EXHAUST -OPENINGS

9.6.5.1 Openings are provided for intake and exhaust of air where outside air is required for ventilation. Where natural ventilation is used, the opening of windows is sometimes sufficient. For forced ventilation, special openings are required. The number of openings for intake and exhaust of air depends on the space arrangement in the .building, on the size of the building and the design of the ventilation system. Small.

power plants may have one opening of each type. For larger power plants, separate outside air intake should be installed for the control, service and main unit bays. Each intake should be provided with storm louvers, screens, and dampers for controlling the mixture of outside and circulated air. The obstructive effect of the louvers should be compensated for by making the gross area of the initial intake twice the area of the connecting duct. When filters are used, the area should be increased to accommodate the required filter area.

9.6.5.2 Air opening may be placed any where on the exposed walls or roof of the power plant building, except that, in order to reduce dust intake, air intake should be at least 1*25 m above ground or deck level.

9.6.5.3 Air is exhausted from the building through exhaust openings provided with louvers or by axial-flow exhaust fans located near the roof in the main generator room. Normally, the number of exhaust openings may be more than the air inlet openings, since the spaces to be exhausted are seldom located in the same general area, nor do they have common requirements. Individual centrifugal fans and connecting ducts are usually installed to exhaust air from toilets, battery rooms and oil storage rooms.

9.6.5.4 The size of air openings is dependent on noise level, and to a lesser degree, on horse power requirements, since the smaller the opening the higher will be the noise level and the resistance. The size of air openings may also be worked out from the air velocity as recommended in Table 2, which will be found to give satisfactory results in designing conventional systems.

9.6.6. AIR CLEANING

It is desirable to clean the air entering the power plant building in order to remove the air-borne dust particles which, if allowed to enter the building, may have an abrasive effect on rotating machinery, interfere with the operation of electric or electronic devices, and may, otherwise settle on equipment, giving a dirty appearance. The air filters are usually located upstream of the fan. The size of the air filters may be determined by the recommended velocity of air passing as given in Table 2. The choice of the air filter may be made by reference to the manufacturer's catalogues.

9.6.7 AIR-CONDITIONING

9.6.7.1 When the desired temperatures and humidities inside the hydel power station are not obtainable by ordinary ventilation, air-conditioning may be resorted to bv heating or cooling the entering air to the desired temperature to maintain comfortable working conditions in the premises occupied by working personnel. The premises where it will be desirable

TABLE 2 RECOMMENDED AND MAXIMUM DUCT VELOCITIES FOR SYSTEMS IN POWER HOUSE BUILDINGS

(Clauses 5.4 *and* **6.1)**

Sl No.	DESIGNATION	Recommended Velocities	Maximum Velocities
i)	Outer air intakes	150	370
ii)	Filters*	110	110
iii)	Heating coils*	180	210
iv)	Air washers	150	150
v)	Fan outlets	500-730	850
vi)	Main ducts	370-550	670
vii)	Branch ducts	250-300	550
viii)	Branch risers	250	500

*These velocities are for total face area and not the net free area; other velocities in the table are for net free area. The net free area is the total minimum area of the opening in the face of a coil, grille, register or louver through which air can pass.

to provide air-conditioning are control, room, machine shop, offices, reception room, first-aid room, dark room, electrical laboratory, switchgear -and terminal board room and telephone and carrier communication room. For air-conditioning reference may be made to IS: 659-1964*.

9.6.7.2 In general, all rooms, used by sedentary personnel should be maintained at 22°C with a relative humidity of about 50 percent, or in special cases local radiant type portable heaters may be used for the space actually occupied. Operation of the air-conditioning system should be independent of the main ventilating system and the control of the system should be automatic by means of thermostatic devices. Heating and cooling load computations may be based on currently accepted standard practice.

9.6.8. DUCTS

9.6.8.1 Where positive ventilation requires ducts for proper air distribution, considerable advantage may be achieved by incorporating the ducts into the building structure and by having the interior surfaces carefully finished to render them smooth and air-tight.

9.6.8.2 Where metal duct work is installed, it'should be fabricated from galvanized steel or aluminium sheets, and should conform to IS :655-1963*.

9.6.8.3 The transfer of air by ducts; from source to delivery point, should be as direct as practicable with the fewest possible bends. Flexible connections should be provided between fans and duct work to pfevent the noise of fan vibration being transmitted directly to the sheet-metal ducts.

9.6.8.4 The size of the air ducts should be worked out from the permissible air velocities given in Table 2.

9.6.8.5 Supply and exhaust ducts of acid battery rooms should be painted with acid resistant paint both inside and outside.

9.6.8.6 Ducts should be suitably insulated wherever required.

9.6.9 AIR DISTRIBUTION CONTROL

To regulate the flow of air in a ventilating system, control dampers should be provided throughout. At outside air intakes, multi-louver dampers should be used to control the amount of air admitted. A similar damper is required on inside air intakes to control the amount of rectrculated air. These two dampers should be interconnected to permit regulation of the proportion of outside air to inside air used in the ventilating system. These may be operated manually or automatically. Back-draft dampers are used where it is desired to prevent a reverse flow of the air, such as the air supply duct to a battery room. Exhaust ducts from rooms containing a fire hazard should have dampers which can be automatically and manually closed in case of fire. Discharge openings, provided with propeller exhaust fans, should be fitted with motor or mechanically operated type multi-louver dampers, which will open and close automatically when the fan motor starts and stops.

CHAPTER – 10

SWITCHYARD EQUIPMENT AND LAYOUT (Isolator, Potential Transformers, Current Transformers and Switchyard Structures)

10.1 Substation Main Equipment

Outdoor step up substation at hydro electric stations comprises of mains, ancillary equipment and switchyard structures. Main Characteristics of the various equipments are as follows:

10.1.1 Bus bars

The out door bus-bars are either of the rigid type or the strain type.

In the rigid type, pipes are used for bus-bars and also for making connections among the various equipments wherever required. The bus-bars and the connections are supported on pedestal insulators. This leads to a low level type of switchyard wherein equipment as well as the bus-bars are spread out. Since the bus-bars are rigid. The clearances remain constant. However as the bus-bars and connections are not very high from the ground, the maintenance is easy. Due to large diameter of the pipes, the corona loss is also substantially less. It is also claimed that this system is more reliable than the strain bus. This type is however not suitable for earthquake prone area due to rigidity.

The strain type bus-bars are an overhead system of wires strung between two supporting structures and supported by strain type insulators. The stringing tension may be limited to 500-900 kg. depending upon the size of the conductor used.

10.1.2 Bus bar Material – The materials in common use for bus-bars and connections of the strain type are ACSR and all aluminum conductor. Bundle conductors are used where bus-bars with high current or to limit corona are required (420 kV). The following sizes are commonly used.

72.5 kV;	30 x 2.79 + 7 x 2.79 ACSR
145 kV;	30 x 4.27 + 7 x 4.27 ACSR
245 kV;	54 x 3.53 + 7 x 3.53 ACSR
420 kV;	54 x 3.53 + 7 x 3.53 Twin or quad ACSR

or

42 x 4.13 + 7 x 2.30

I the case of rigid bus arrangement, aluminum pipes of Grade 63401 WP confirming to IS: 5082 are commonly used. The sizes of pipes commonly used for various voltages are given below:

40 mm
65 mm
80 mm
80 mm
100 mm

Since aluminum oxides rapidly great care is necessary in making connections. In the case of long spans expansion joints should be provided to avoid strain on the supporting insulators due to thermal expansion or contraction of pipe.

The bus bar sizes should meet the electrical and mechanical requirements of the specific application for which they are chosen.

10.1.3 Circuit Breakers

Circuit breakers of the types indicated below are general used in India:

11 kV Air circuit breakers and Vacuum circuit breakers
36 kV Vacuum and SF-6 circuit breakers
72.5 kV SF-6 circuit breakers
145 kV and above sulphar hexa fluoride (SF-6) and Air Blast type

Other types of circuit breakers e.g. bulk oil, minimum oil are no longer specified due to space, maintenance and cost constraints. Even air blast circuit breakers are being phased out. Replacement of these breakers in existing installations is being made by the circuit breaker mentioned above. For technical specifications refer chapter 5.

In the case of outdoor type installation, the circuit breakers have fixed locations and the station layout is such that adequate section clearances are always available from the live parts. In the case of indoor type installation, the circuit breakers of the draw out type are used so as to facilitate removal of breakers to a safe place for maintenance purposes.

10.1.4 Isolators

Isolating switches are used to isolate equipment for maintenance. Isolating switches on line side are provided earthing blade for connection to earth in off position for safety. They are also used for transfer of load from one bus to another. This is not recommended because the isolating switches are designed for no load operation. Inadvertent change over on load will damage the switch. Although a variety of disconnect switches are available, the factor which has the maximum influence on the station layout is whether the disconnect switch is of the vertical break type or horizontal break type. Horizontal break type normally occupies more space than the vertical

Technical specifications – isolator ratings, design, Temperature rise and testing etc. should be in accordance with IS: 9921 (part I to IV).

Each isolating switch should have the following particulars under the site conditions for the system under design (typical values for 72.5 kV system are given).

1	Highest system voltage	72.5 kV
2.	Rated frequency	50 cycles/second
3.	Rated insulation level without arcing horns (based on system insulation coordination) (a) Impulse withstand test voltage with 1.2/50 micro-second, +ve and –ve wave to earth and between poles	325 kV (Peak)
	(b) One minute power frequency (wet) withstand voltage against ground and between poles.	140 kV (rms)
4.	Continuous rated current (based on system studies)	1600 Amps.
5.	Short time current ratings (based on system studies)	
	a) For one second	Not less than 20 kA(rms)
	b) For three seconds	Actual value to be stated.
7.	Rated DC voltage for auxiliary circuits (station DC voltage)	110 volts ±10% D.C.
8.	Rated supply frequency and voltage of A.C. operating devices.	3 phase, 415 volts and Single phase 220 volts, at 50 c/s

The location of disconnect switches in substations affects substation layouts. Maintenance of the disconnect contacts is also a consideration in the layout. In some substations, the disconnects are mounted at high positions either vertically or horizontally. Although such substations occupy smaller areas, the maintenance of disconnect switch contacts in such substations is more difficult as the contacts are not easily accessible.

Interlocks : The purpose of interlocks in substations is to ensure the safety of equipment and operating personnel and to prevent unauthorized or inadvertent operation of equipment.

Interlocks may be of the mechanical type key or electrical type. In the key type, a key is used, the mechanism being so designed that it can be operated by the correct key, number of which is engraved on the key as well as on the lock. The electrical interlock is provided for operational purposes as distinguished from maintenance purposes because complex interlocking schemes requiring use of many keys would otherwise become necessary. Normally, auxiliary switches are provided for isolator remote position indication on control panel and for electrical interlocking safety.

A typical interlocking scheme for single sectionalize bus and unit connected generators (fig. 10.2) is given below.

"For the purpose of making the operation of the isolator dependent upon the position of the associated circuit breaker or other equipment as may be required at site, a suitable electrical interlock should be provided on each isolator. The interlocks should be of robust design of some reputed make and contained in a weather proof and dust tight housing.

Besides the electrical interlocks, the earthing switches shall be provided with mechanically operated interlock so as to ensure that :-

(a) It shall be possible to close the earthing switch only when the isolating switch is in the fully open position.
(b) It shall be possible to close the isolating switch only when the earthing switch is in the fully open position.
(c) The earth switch should not open automatically while attempting to close the isolator.

The operation of the earth switches shall also be interlocked with the CVTs/CTs supplies from the transmission line i.e. it shall be possible to close the earth switch only when the line is dead from the feeding end, and there is no supply from the secondaries of the line CVTs/CTs.

(d) The operation of earth/isolating switch shall not take place when the corresponding isolator/earth switch is in operating stroke.

In addition to the above, the line and the bus isolators shall fulfil the following requirements:-

(i) The circuit breaker of corresponding bay is open.
(ii) The bus isolator of the bus coupler bay shall close only when the bus coupler circuit breaker is open.
(iii) The line isolator shall close only when the corresponding circuit breaker and the earthing switch of the corresponding line are open.
(iv) Electro magnetic type interlocking shall also be provided to avoid wrong local operation of the isolator (manual or motor) when the corresponding circuit breaker is in closed position.

Isolators and earth switches shall be so designed that the above noted requirements can be conveniently met. Detailed control schematics incorporating all the necessary interlocking features for a bus coupler bay, a transformer bay, a line control bay shall be prepared, and submitted with the tender for the approval of purchaser. Equipment excluded in the scope of supply on the basis of control schematics shall be clearly marked on the drawings".

10.1.5 Current Transformers

Current transformers may be either of the bushing type or wound type. The bushing types are normally accommodated within the transformer bushings and the wound types are invariably separately mounted. The location of the current transformer with respect to associated circuit breaker has an important bearing upon the protection scheme as well as layout of, substation. Current transformer class and ratio is determined by electrical protection, metering consideration.

Technical specifications – Current ratings, design, Temperature rise and testing etc. should be in accordance with IS: 2705 (part I to IV).

Each current transformers should have the following particulars under the site conditions for the system under design (typical values for 72.5 kV system are given).

i)	Nominal system voltage	66 kV	
ii)	Highest system voltage	72.5 kV	
iii)	Frequency	50 Hz	
iv)	Insulation level (based on system insulation coordination) (a) Impulse withstand test voltage with 1.2/50 micro-second, +ve and –ve wave to earth and between poles (b) One minute power frequency (wet) withstand voltage against ground and between poles.		325 kV (Peak) 140 kV (rms)
v)	Short time current rating (based on system studies)	31.5 kA	
vi)	Rated dynamic current peak (based on system studies)	78.75 Ka	
vii)	Total minimum creepage of CTs bushings (based on environment)	1875 mm	

10.1.5 Potential Transformer

The voltage transformer may be either of the electro-magnetic type or the capacitor type. The electro-magnetic type VTs are costlier than the capacitor type and are commonly used where higher accuracy is required as in the case of revenue metering. For other applications capacitor type is preferred particularly at high voltages due to lower cost and it serves the purpose of a coupling capacitor also for the carrier equipment. For ground fault relaying an additional core or a winding is required in the Voltage transformers which can be connected in open delta. The voltage transformers are connected on the feeder side of the circuit breaker. However, another set of voltage transformer is normally

required on the bus-bars for purpose of synchronization. Potential transformer class and ratio is determined by electrical protection, metering consideration.

Technical specifications – Potential transformer, design, Temperature rise and testing etc. should be in accordance with IEC: 186

Each potential transformers should have the following particulars under the site conditions for the system under design (typical values for 72.5 kV system are given).

1	Rated voltage	-	72.5 kV
2	Rated frequency	-	50 c/s
3	Accuracy class of		
	Winding	-	1.0
4.	Voltage ratio		66 kV/√3/110V/√3

5.	Grade of oil	:	As per IS: 335
6.	Maximum phase angle error with 25% and 110% of rated burden at 0.8 p.f. lagging at any voltage between 80% and 120%	:	40 min.
7.	Temperature rise at 1-1 times rated voltage with rated burden (OC)	:	As per IS: 3156
8.	Rated voltage factor & time (based on system studies)	:	Continuous – 1.2 30 seconds-1.5
9.	Insulation Level (based on system insulation coordination)		
i)	1 minute power frequency (wet/dry) withstand test voltage	:	140 kV r.m.s.
ii)	1.2/50 micro seconds impulse wave withstand test voltage	:	325 kV (Peak)
10.	One minute power frequency withstand test voltage on secondaries	:	2 kV
11.	Minimum creepage distance of bushings (based on environment)	:	1815 mm

10.1.7 Transformers

Transformer is the largest piece of equipment in a substation and it is, therefore, important from the point of view of station layout. In step up substation of hydro generating station, generator transformers are generally located on the transformer decks in the power house so as to reduce heavy cost of generator transformer connections by bus ducts. The transformer are connected to the switchgear in the switchyard by interlinking over head lines and in some cases (underground power house) by HV cables in tunnels. In small hydro stations transformer are installed in the switchyard and the bay width is determined by transformer dimensions. Arrangement for removal of transformer in case of repair/maintenance without disturbing other equipment is required and also affects layout. In order to reduce the chances of spread of fire, large transformers are provided with a soaking pit of adequate capacity to contain the total quantity of oil. Besides, separation wall are provided in between the transformers and also between the transformer and roads within the substation.

One of the important factors governing the layout of the substation is whether the transformer is three phase or a bank of 3 single transformers. Single phase transformers are primarily provided because of transportation difficulties. The space requirements in the case of single phase banks are much larger than the three phase transformer. Besides, in the case of single phase banks, it is usual to provide one spare single phase transformer which is kept in the service bay and used in case of a fault or maintenance of one of the single phase units. Alternatively the spare unit may be permanently installed in the switchyard ready to replace the unit which is out of service. This requires elaborate bus arrangement. It is recommended that spare transformer be kept energized or else it may be kept in an enclosed space and temperature is maintained about 5^0 C above ambient to keep it dry.

For technical specification refer chapter 4.

10.1.8 Lightning Arrestors

Lightning arrestors are the basis of insulation co-ordination in the system and are installed at outdoor transformer terminals for direct protection against lightning impulse overvoltage spark over (1.2/50 micro second wave) and are capable of withstanding dissipation of energy associated with lightning impulse only. This implise that temporary overvoltages (at or near power frequency) which are of the order of mili-second must be withstood to avoid damage.

Modern metal oxide (gapless) lightning arrestor confirming to following standards are now being specified.

IEC: 99-4 - Speficaiotns part – 4 for surge arrestor without gap for AC system
IS: 3070 - Specification for lightning arrestors

Typical parameters for a 66 kV system are given below.

SI No.	Particulars	System Voltage(kV rms)
1	Nominal system voltage (kV rms)	66
2	Highest system voltage (kV rms)	72.5
3	1.2/50 microsecond impulse voltage withstand level	
	a Transformers (kVp)	325
	b Other equipment and lines(kVp)	325
4	Minimum prospective symmetrical fault current for 1 second at Arrestor location (kA rms) (based on system studies)	31.5
5	Anticipated levels of temporary overvoltage and its duration (based on system studies)	
	a> Voltage(p.u.)	1.5/1.2
	b> Duration (seconds)	1/10
6	System frequency(Hz)	50 ±2.5 c/s
7	Neutral Grounding	Effectively earthed
8.	Number of Phases	Three

General Technical Requirements

1 The Surge Arrestors shall conform to the technical requirements as per Annexed here in after.

2 The energy handling capability of the Arrestor offered, supported by calculations shall be furnished in the offer

3 The Lightning Arrestor shall be fitted with pressure relief devices and arc diverting ports and shall be tested as per the requirements of IEC specification for minimum prospective symmetrical fault current as specified in clause 10.4.3.

4 The grading ring on each complete Arrestor for proper stress distribution shall be provided if required for attaining all the relevant technical parameters.

TECHNICAL REQUIREMENTS FOR METAL OXIDE(GAPLESS) LIGHTNING ARRESTORS

SI No.	Particulars	Requirement of parameters 66kV
1.	Rated Arrestor Voltage kV rms	60
2.	.(kV rms) Max. continuous operating voltage	49
3.	Installation	Outdoor
4.	Class	Station Class
5.	Type of construction for 10 kA Phase rated arrestor	Single Column, Single
6.	Nominal discharge current corresponding to 8/20 micro sec wave shape(kA rms)	10
7.	Min. discharge capability	5 kj/kV (Referred to rated arrester voltage to Min.discharge characteristics)
8.	Type of mounting	Pedestal
9.	Connection	Phase To Earth
10	Long duration discharge class	3
11.	Max.Switching Surge kV(P) Protective level voltage at 1000 amp.	140
12.	Max. residual voltage kV(P) for nominal discharge current 10 kA with 8/20 micro second wave	170
13.	Max. residual voltage kV(P) steep frontedcurrent impulse of 10kA	186
14	Minimum prospective symmetrical fault current for pressure relief test(kA rms)	31.5
15.	a. Terminal Connector suitable for ACSR conductor size	Single Zebra
	b. Take off	Vertical/Horizontal
16.	Voltage (kv rms) (corona extinction)	Rated voltage of the arrestor
17.	Maximum radio interference voltage (Microvolt) when energised at MCOV	500 Microvolt
18.	Whether insulating base and discharge counter with milli-ammeter are required	yes
19.	Minimum creepage distance of Arrestor housing(mm)	1813 mm

10.1.9 Lightning Protection

A substation has to be shielded against direct lightning strokes by provision of overhead earth wires or spikes. This equipment is essential irrespective of the isoceraunic level of the area due to .serious consequences and damage to costly equipment in case substation is hit by a direct stroke. The choice between these two methods depends upon several factors economy being the most important consideration. Both the methods have been used sometimes even in the same station. Generally, the spikes method involves taller structures than the alternative of using earth wires. Another method' comprises the use of separate lightning masts which are provided at location determined on the basis of sub station area and height of bus-bars. - Besides providing lightning protection, these masts serve as supports for luminaires required for switchyard illumination. Spikes and the earth-wire .have to be suitably placed so as to provide coverage to the entire substation equipment. Generally an angle of shield of about 45° for the area between ground wires and, 30° for other areas is considered adequate for the design of lightning protection system.

10.1.10 Insulators

Provision of adequate insulation in a substation is of primary impedance from the point of view of reliability of supply and safety of personnel. However, the station design should be so evolved that the quantity of insulators required is the minimum commensurate with the security of supply. An important consideration in determining the insulation in a substation, particularly if it is located near sea or a thermal power generating station or an industrial plant is the level of pollution. As a first step to combat this problem, special insulators with higher leakage distance should be used. In case this does not suffice, washing the insulators by using live line equipment has to be resorted to and this aspect has to be kept in mind while deciding the layout of the substation. Another method which has proved to be successful in other countries involves the application of suitable type of greases or compounds on the surface of the insulators. This, however, also requires cleaning of insulation, the frequency depending upon the degree and the type of pollution.

10.1.11 Structures

The cost of structures is a major consideration while deciding the layout of a substation. For instance, in the case of strain bus-bar arrangement, cost of structures is much higher than in the case of rigid bus type. Similarly the form of structures also plays an important part and the choice is usually between using few number of heavy structures or a larger number of smaller structures.

Steel is the most commonly used material in India for substation structures. Normally the steel structures are hot-tip galvanized so as to protect them against corrosion. However, galvanizing sometimes has not proved effective, particularly in substations located in costal or industrial areas and in such cases painting becomes essential. In other countries special paints have been developed which are applied within the shop and these paints have proved quite effective.

Reinforced concrete structures have sometimes been used in place of steel and it has been found that maintenance of these structures is almost negligible. The structures are cast in situ.

10.1.12 Carrier Equipment

The carrier equipment required for communication, relaying and tele-metering is connected to line through coupling capacitor and wave trap. The wave trap installed at the line entrance. The coupling capacitors are installed on the line side of the wave trap and are normally base mounted.

10.2 Auxiliaries

Besides the main equipment a number of auxiliary facilities and system as enumerated below have to be provided and may affect layout. In step-up substations most of the facilities are provided in the power house. Design of these systems are discussed along with the power house auxiliary systems.

a) Earthing and Grounding
b) Oil Handling System
c) Illumination and lightning system
d) Compressed air system
e) Fire protection system
f) AC Auxiliary power system
g) DC system
h) Cables
i) Communication system

10.2.1 Cabling

Trenches and cable ducts are normally employed for cable runs. In very large substations, particularly those associated with power plants, cable tunnels are generally provided to carry cables from the switchyard to the power house. The power house is generally at lower level then the switchyard. Accordingly arrangements are made to provide drainage and prevent flooding on the power house due to rain water. Except where cables enter and take off from trench, directly buried cables are generally avoided due to problems of locating the fault and rapidly restoring the supply.

The substation area should be properly graded so that the rain water is drained off away from the cable trenches. For draining off any water that may enter, the trenches should be sloped in their run to drain freely and necessary arrangements made to remove the accumulated water as and when required. Cable trenches should be provided with strong and effective covers. Cables should not be laid directly in the trench floor. At points of entry into indoor areas, termination chambers etc. waterproof and fireproof sealing arrangements should be made. Cable trenches should not run through oil rooms.

Conduits should have the minimum number of bends in their run. Pull boxes to facilitate cable pulling should be provided at suitable locations. Conduits should be sloped and drained at low points. Care must be exercised to see that water doest not accumulate within the conduits or drain into the equipment at the end.

In indoor areas, racks supported on walls, ceiling or floor, floor trenches, clamping of cables to walls or ceiling may be used. Wherever a large number of cables are involved and condition so permit a system of racks is preferable as it gives quick access. Particular care should be taken in substation design to permit easy entry of cable switchgear with convenience of handling even afterwards.

Cable laying should be done in accordance with systematically prepared cable schedules. In major substation thousands of separate cables will be involved, and quick tracing of defects will depend very much on the orderliness exercised while laying. All cable ends should be suitably labeled to facilitate easy identification. Spare racks should be provided for emergency and unforeseen use.

Power cables and control cables should be segregated by running in separate trenches or on separate racks, so that in the event of a fire, the control cables are not affected. Segregation to some extent of Ac and DC control cables is also useful. Separate control cables should be used for each CT and PT. In the case of 420 kV substation several cables should be used for CT and PT circuits and armoured cables for other circuits. These should not be included in the cores of other multi core control cables. While arranging cable runs it should be kept in mind that the arrangement should be such that a fire at some point will not lead to complete shutdown of the whole substation for a long time. Flexible conduits should be used at terminal connections to motors, pumps etc. The main trenches should be formed such that heavy current carrying conductors do not run parallel to the control cables.

The cable ducts should be laid away from lightning arrestor to minimize the effect of high discharge current flow.

In main trenches a heavy current carrying conductor should be run parallel to control cable. This conductor should be clamped at suitable welded intervals to the support angles and earthed to rod electrode at every 20/25 meter intervals. This shield conductor drains all induced currents and avoids generation of heavy induced voltage in the control cables.

Power cables are placed in the first rack. Lower racks contain control cables. If unarmoured cables are used these should find place in the bottom most racks.

10.2.2 Crane Facilities

Large substations sometimes has the facilities of repair bay alongwith a crane of adequate capacity for handling the heaviest equipment which is usually the transformer. In view of

heavy cost and infrequent use, however, this facility is not provided in all substations. In the case of substations near the generating stations, the service bay and crane facilities normally available at the generating station are utilized. In the case of substations, which are not near a generating station, crane and service bay facilities may be provided at one centrally located substation to serve a group of nearby substations connected by road or rail.

Provision of a rail track should be made for movement of transformer from switchyard to the repair bay. Points for jacking, winching should be provided at the transformer foundations and 90^0 turn on the rail track for changing the direction of the wheels.

10.3 Switchyard Layout

A typical layout of the 66 kV switchyard step up station with single sectionalized bus is enclosed.

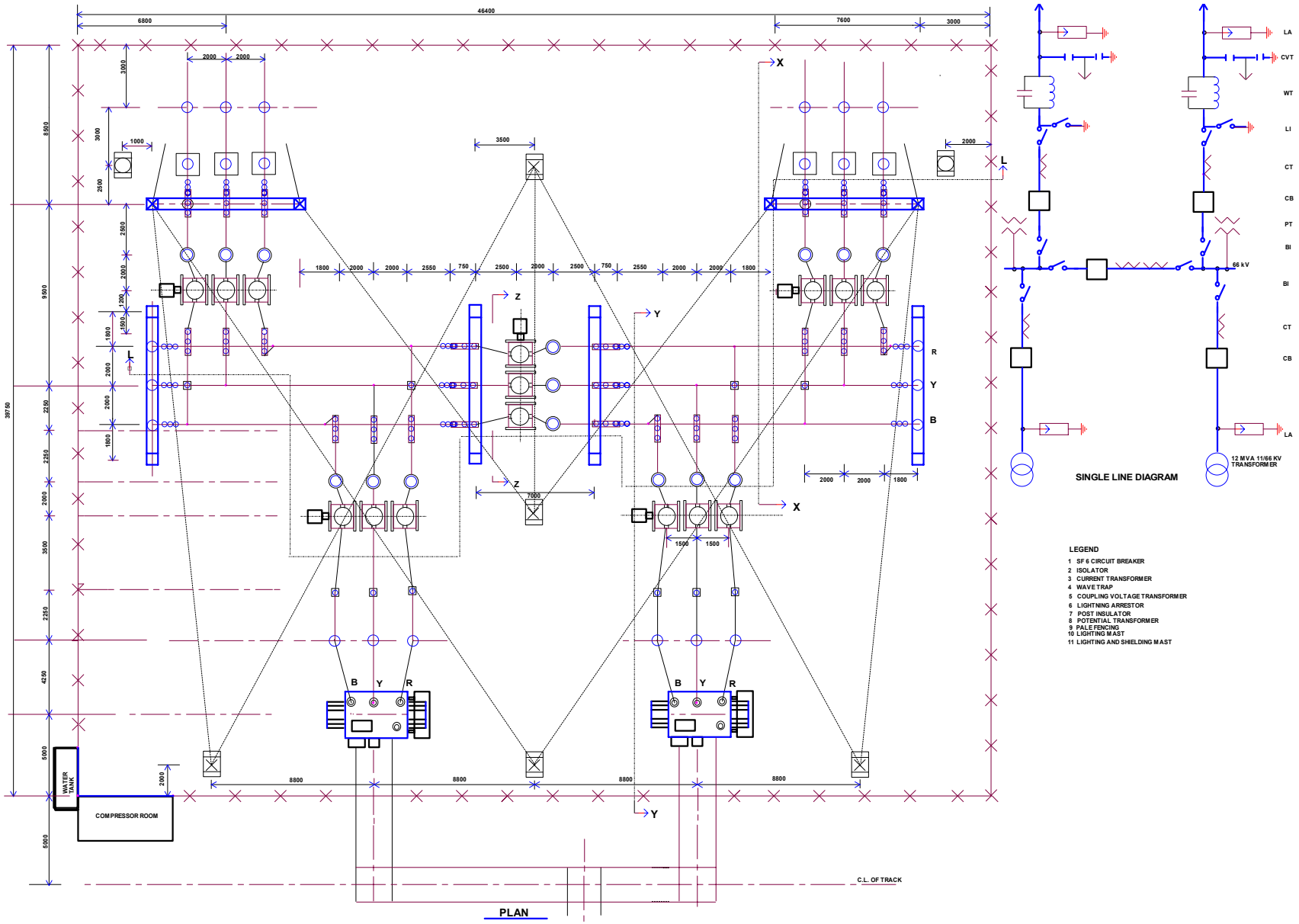

Fig. 10.2 Layout of 66 kV Switchyard (Plan)

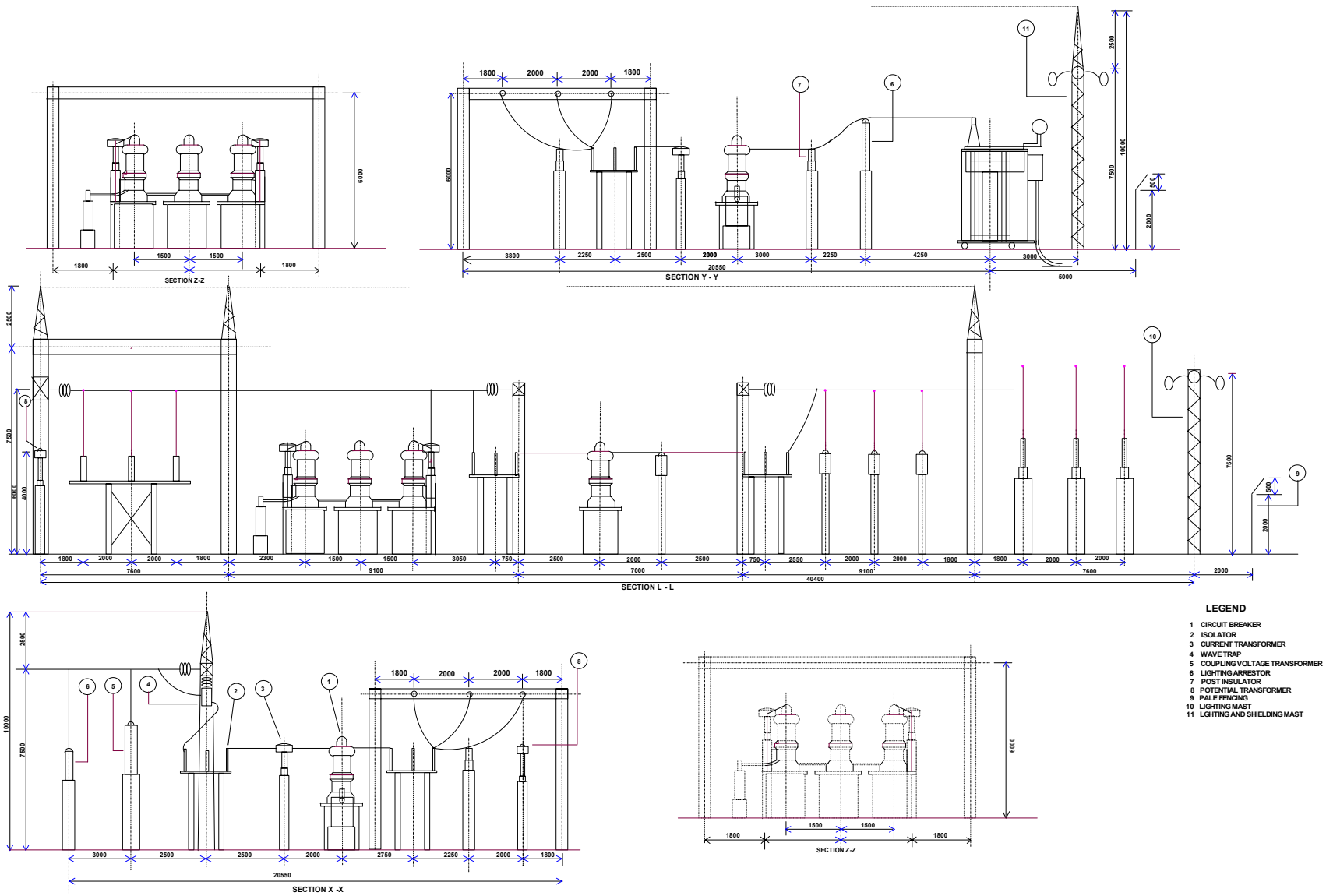

Fig. 10.3 Layout of 66 kV Switchyard (sections)

CHAPTER - 11

ERECTION, COMMISSIONING, FIELD TESTING, RENOVATION AND MODERNISATION

11.1 COMMISSIONING

The term "COMMISSIONING" means the activities of functional testing of the complete system after erection, including tuning or adjusting the equipment for optimum performance meets the requirement of the specifications.

11.1.1 Erection and Testing Equipment and Erection Spares

All erection and testing equipment including tools, tackles, slings, lifting and other appliances.

11.1.2 Inspection and Tests at Site

During erection, commissioning and trial operation, all inspections and tests are performed in order to prove the orderly execution of the works in accordance with the Specifications.

11.2 TEST AT SITE

A site testing manual listing in detail the tests to be performed during commissioning taking into consideration field tests to be performed for turbines, generators, transformer, breakers, control and protection equipment, switchyard equipment and auxiliary is provided.

11.2.1 Tests Prior to First Rotation

Following equipment is correctly adjusted or calibrated to operate satisfactorily before trying the first rotation of the generating unit. The tests normally include following:

1. System Tests

- Governing system including oil pressure unit
- Compressed air system
- Operation of guide vanes with dry spiral casing
- Opening / closing operations of inlet valve with dry spiral casing
- Operation of intake gates
- Cooling water system
- Operation of emergency closing devices
- Operation of generator brakes

2. Electrical Tests

a) Full functional checking and setting up of the following

- All ancillary AC apparatus
- All ancillary DC apparatus
- All alarms and trips
- All electrical protections
- Switchgear
- All associated turbine and generator control and miscellaneous items

b) Polarity testing, ratio testing and magnetizing curves of all current transformers.

c) Polarity testing and insulation testing of all voltage transformers

d) High voltage insulation testing of the following:

- Cables
- Transformers
- Generators
- Switchgear

11.2.2 Initial Run, Test Run and Commissioning Test

The procedure for initial run, test run and commissioning tests should be carried out on all individual systems/elements of the power plant and the generating units in accordance with the with IEC Publication 60545 "Guide for Commissioning, Operation and Maintenance of Hydraulic Turbines" or relevant IS or standards of the country of origin to verify the guaranteed technical particulars, correctness of sequences and logics, operation of all safety and protection elements, testing of speed and pressure transients on load acceptance and rejection and smoothness of operations. The commissioning test reports are prepared.

11.2.3 Trial Run

Immediately upon completion of commissioning the generating unit is kept on trial operation during which period all necessary adjustments are made while operating over the full load-range enabling the plant to be made ready for performance and guarantee tests. The duration of trial operation of the complete equipment is normally 72 hours continuous run.

The trial operation is considered successful, provided that each item of the equipment can operate continuously at the specified operating characteristics for the period of trial operation.

The trial operation report comprising of observations and recordings of various parameters measured in respect of the above trial operation is prepared. This report, besides recording the details of the various observations during trial run, also include the dates of start and finish of the trial operations. The report should record all the details of interruptions occurred, adjustments made and any minor repairs done during the trial operation.

If any defects or irregularities affecting the safety or reliability of the Works arises during the trial run, the trial run is interrupted and started again after such defects or irregularities have been corrected.

11.3 SITE PERFORMANCE TESTS ON COMPLETION AND HANDING OVER

To prove the Guaranteed Performance Parameters e.g. capacity and efficiency of the equipment, one generating unit selected by the Purchaser after completion of commissioning and running the sets for commercial operation, is tested in accordance with the test programme set out in respective Technical Specifications and the agreed procedure.

The calibration of various testing instruments is done by `authorized agencies' and institutions.

The site performance tests should be completed before the expiry of the Defects Liability Period or issuance of Final Acceptance Certificate.

11.4 TEST FOR PARAMETER GUARANTEED UNDER PENALTY

11.4.1 Tests for turbine output and Efficiency

The guaranteed range of outputs for each scheme should be tested. The testing should be in accordance with IEC Publication. No. 41 “International Code for the Field Acceptance Tests of Hydraulic Turbines” or relevant IS or standard of the country or origin.

Pressure gauges are calibrated with a mercury manometer prior to the testing.

The turbine output in each test is determined by measuring the electrical output of each unit and subtracting generator losses calculated from the generator works test results.

When comparing the site test results with the guaranteed performance, the error in the test results are assumed to be as allowed in IEC Publication No. 41 or relevant IS or standards of the country of origin.

11.4.2 Generator Output and Temperature Rise

The generator output in relation to guaranteed temperature rise shall be tested at site by performing a heat run in accordance with relevant IS. The resistance temperature detector installed in the generator stators are used to measure machine temperature.

11.4.3 Supervisory control and communication equipment is tested as per specification.

11.5 TESTS ON COMPLETION AND ACCEPTANCE

The tests described in the foregoing subsection entitled “Field Testing” are the “Tests on Completion”. The tests must be completed before the acceptance certificate is issued.

For successful completion of field tests of the mechanical equipment’s, the calibration of various instruments is done by ‘authorized agencies’.

A separate protocol of acceptance is issued in respect of each set of generating equipment.

11.6 RENOVATION AND MODERNISATION

11.6.1 Introduction

The turbine-Generator sets in hydro stations have a normal life of about 35-40 years after which operational problems crop up and outages increase. By Renovation and Modernisation (R & M) a second lease of life is given to the Turbine Generator set. Renovation and Modrenisation (R & M) involves replacement of the auxiliaries, governor, excitation system & rewinding of generator. Both the R & M can be done at marginal cost and greatly help in increasing the contribution to the grid by the hydro generation.

Old hydroelectric plants need renovation and modernization due to following reasons.

1. Obsolence and non availability of spares.
2. Old generator windings are generally equipped with Class B insulation which deteriorates resulting in derating and forced outages. Rewinding is required with modern insulation system.
3. Derating of the unit output due to wear and tear.
4. Increase in forced outages due to deterioration in the condition of wearable parts, unit and station auxiliaries, instruments, protective relays and control equipment.
5. Change in the operating criteria of the power plant in the system i.e. change in plant load factor requiring additional capacity, requirement of higher excitation system due to larger grid may require change over to static excitation system etc.
6. Mechanical flywheel type governor for turbine control is now obsolete and not suitable for modern system for interconnected large grids for speed control and load sharing. It is required to be changed to modern digital governor control.
7. Old shaft mounted excitation system is very slow and requires to be replaced by modern static excitation system or shaft mounted brush less system for small generators.
8. Control and protection system concept and equipment have changed. Modernization is required to change control and protection equipment.

11.6.2 Generator

Stator Winding:- Most commonly affected element during long operation is stator winding. Depending on the conditions, operation and life, it may be required to be replaced. The benefit of development of modern insulation system is that it takes up less space in the stator slot. It can be electrically stressed at higher volts/mil of thickness and can withstand higher temperatures. This gives more room in the stator slot for copper and at the same time allows better heat transfer for cooling.

Rotor Winding:- Increase in stator output requires increased output of pole winding; occasion may arise for complete rewinding of field in order to keep the temperature rise of field winding within permissible limits.

Stator Core:- Looseness of stator core are commonly encountered in old generators causing slippage of punchings and failure winding insulation. This problem can be tackled effectively by rebuilding the stator core using higher clamping pressure.

Stator Core damage due to earth fault and flashover to the core, restricts output of the machine and requires to be assessed and replacement/repair of the core is essential to restore the machine capability to its full or enhanced rated output.

11.6.3 Ventilation and Cooling

The effectiveness of the ventilation system can be increased by modifying /changing the following.

i) Changes in the air guides
ii) Replacement of fan blade with improved profile
iii) Additional air baffle to allow the flow of air to critical paths.

11.6.4 Turbine

A simple test of guide vane opening against output will give the present efficiency. Non destructive tests will reveal the presence of inherent cracks in stay vanes, runner blades, spiral casings, etc., Runner can be changed if it is economically viable, as the modern runners have a peak efficiency in the order of 94%.

Guide Vane: Uprating is achieved partly by way of increasing the efficiency and partly by providing additional discharge. In most of the older units, the guide vane will be limiting the discharge. Hence, to provide additional discharge at the uprated output, guide vanes have to be remachined to create more area of opening or replacing the guide vanes. If water velocity in the water conductor system is within permissible limit and surge shaft is capable of meeting additional surge, replacement of guide vane is preferable.

11.6.5 Excitation System

In older machines, rotating type exciters are designed for the control of excitation for synchronous generators. However this system can not cope up with the complexity, fast response required. The development of static excitation system has many advantages.

i) Elimination of rotating parts substantially reduces the losses and operating cost.
ii) It facilitate easy maintenance and redundancy management and results in improved reliability and availability.
iii) The system response will be faster and more effective during transients.

11.6.6 Governors

In general the governor oil pressure system can be retained if the turbine wicket gate and servomotors remains unaltered, provided the governor is in serviceable condition. However, a new electronic (digital) governor is required for improved control and automation.

11.6.7 Auxiliaries

The system such as lubrication, fire protection, braking, speed sensing, etc. can be modified suitably and made compatible for automatic operation and remote control.

Conventional brake system suffers from the problem of sticking of piston and poor retraction due to reduction in stiffness of spring with time. In double acting brake assembly, these problems can be overcome with the use of compressed air retracting the piston of brake assembly.

11.6.8 A case study of Renovation, Uprating and Modernization of Shivasamudram Hydro Power Station established in 1902 is enclosed.

Case Studies For Renovation and Modernisation of Shivasamudram Hydro Power Station (6 x 3000 kW + 4 x 6000 kW)

The Shivasamudram Hydro Power Station represents the projects having potential of approximately 42.0 MW, but derated at present at 18 MW only (below 25 MW). Galogi hydro power station represents the schemes having potential of approximately 3.0 MW. These are typical examples, which are potential cases for refurbishment and uprating.

Renovation and uprating of old power house is necessary to get optimum energy output by replacing existing unserviceable or low efficiency power units, modernise controls to meet present day requirements and uprate, wherever feasible, to utilise additional water available in excess water flow periods for energy generation or add peaking capacity.

1.1 SHIVASAMUDRAM HYDRO POWER STATION

1.1.1 Introduction

Shivasamudram power station is at a distance of about 125 km from Bangalore. This is a very old hydro power station established in the year 1902. The initial plant in the Powerhouse comprised six Generating units driven by Water Wheels, each of 720 kW capacity and the aggregate effective capacity of the plant was 3600 kW (allowing one of the Generating sets as stand by). The bulk of this Power was transmitted to Kolar Gold Fields at a distance of 148 km from the Power House and incidentally this transmission line was the longest in the World at that time. The balance of the Power generated was transmitted to the cities of Bangalore and Mysore over transmission line of 96 km and 56 km in length respectively at a later date.

The construction of Krishnaraja Sagar (KRS) Reservoir, 96 km upstream assisted the growth of the Shivasamudram Power Station. The first stage of this Reservoir with 11,000 mcft was entirely allocated for Power Purposes. The final stage with 45,000 mcft storage was primarily to cater the needs of irrigation. A minimum of 900 cusecs measured at Shivasamudram had to be let down the river during summer as per the 1924 agreement with the Madras Government. This water was available for power generation continuously. However, as the power demand increased and irrigation requirement being low, a continuous discharge of 1200 cusecs was made available to the Electrical Department.

The Shivasamudram Generating Station with the modest beginning of 3600 kW in 1902 grew into 42,000 kW on completion of the final Stage in 1938. The station was commissioned in nine phases. The installed capacity of 42 MW comprises of 6 units of 3.0 MW and 4 units of 6.0 MW.

Salient features

The storage available at Kabini and KRS Reservoirs, spill over water from these reservoirs and discharge coming into the river down stream of these reservoirs are utilized for generation at Shivasamudram. There is a pick-up dam at Head Works from where water is conducted through a Power Channel for a distance of 1.8 km to Shivasamudram Balancing Reservoir (SBR). From SBR, water is conducted to the forebay through a Power Channel of length 1.2 km. In between, 2 nos. regulator gates are provided to regulate the water level in forebay. From forebay, 10 nos. penstocks carry water to the turbines. For the protection of penstocks, vertical type sliding gates are provided for 3 MW units and Butterfly valves are provided for 6 MW units.

There are 10 nos. Reaction type Horizontal Francis Turbines. All the turbines are provided with MIV and pressure Relief valves. Belt driven mechanical governor is provided for each Generating Unit.

The existing excitation System is of centralized type. The Power House consists of 2 x 250 kW D.C. Generators driven by 400 HP Single running Impulse Turbine and 2 x 250 kW M.G. Set driven by 375 HP, 2.2 kV Induction Motor. 115 V D.C. overhead bus is provided in the Generator hall which is tapped at each machine to provide D.C. excitation. This station generates power at 25 Hz and mainly supplies power to Kolar Gold Fields (KGF) whose contract demand is 14 MW. Balance power is converted to 50 Hz through 2 x 15 MW static frequency converter (SFC). The salient features of the project are as follows:

(i) Location

a)	State	:	Karnataka
b)	District	:	Mysore
(c)	Access	:	125 km from Bangalore

(ii) Diversion

a)	Type	:	Pick-up dam at head works

iii) Power channel

a)	Length	:	3000 m (1200 m from dam to SBR and 1800 m from SBR to forebay)
b)	Source of Supply	:	(a) Krishnaraja Sagar (KRS) reservoir (b) Kabini reservoir

iv) Penstocks

a)	Number	:	10

v) Turbine

a)	Type	:	Horizontal Francis
b)	Number and Rating	:	4 units of 6000 kW and 6 units of 3000 kW

vi) Valves

a)	Pressure inlet valve	:	10 nos. provided with all units
b)	Main inlet valve	:	10 nos. provided with all units
c)	Butterfly valve	:	6 nos. provided upstream of penstocks of 3000 kW units

vii) Gates

a)	Type	:	Vertical slide
b)	Location	:	- 2 nos. in between SBR and forebay to control water level at forebay - 4 nos. upstream of penstocks of 6.0 MW units - 3 nos. river sluice gates and 5 nos. power channel gates at head works

viii) Governor

a)	Type	:	Belt driven mechanical governor

ix) Generator

a)	Type	:	Synchronous

b)	Rating	:	4 of 6000 kW and 6 of 3000 kW
c)	Generating frequency	:	25 Hz
c)	Generating voltage	:	2.2 kV

x) Static Frequency Converter

a)	Number	:	2
b)	Capacity	:	15 MW each

xi) Transformer

a)	Number	:	5
b)	Rating	:	3 of 10 MVA and 2 of 5.25 MVA

(xii) **Cost Estimate**

(a)	Total Project Cost : (without IDC)	:	Rs. 5763 lacs
(b)	Generation Cost per kWh	:	Rs. 0.78

1.1.3 Present Status

At present power generated at Shivasamudram is about 12 to 18 MW at 2.2 kV and 25 Hz. which is stepped up to 78 kV by 3 nos. 10 MVA and 2 nos. 5.25 MVA transformers. About 10 to 12 MW, 25 Hz power is evacuated through 2 nos. 78 kV S/C lines to K.G.F. About 6 to 8 MW Power is converted to 50 Hz Power by Static Frequency Converters. This Power is evacuated through 2 nos. 66 kV S/C lines.

Past performance data of each unit for the last five to six years (1989-90 to 1993-94) has been furnished in Table 1.1.5 to Table 1.1.14.

1.1.4 Hydrology

The powerhouse earlier generated 42 MW in the year 1938. The hydrology of the project is established. The discharge data of the project could not be made available.

1.1.5 Outline of the proposal

As it is necessary to supply 25 Hz power to KGF for another 10 years. It is proposed to retain 6 nos. of 3 MW generators to generate power at 25 Hz, 2.2 kV. It is only proposed to refurbish these units as they are expected to serve only for another 10 years. 4 nos. of 6 MW generators are proposed to be replaced by new units 4 of 6 MW, 11 kV, 50 Hz rating. Thus after Renovation and Modernisation (R&M) works, Shivasamudram Power House will have 6x3 MW of 25 Hz and 4x6 MW of 50 Hz generators. The installed capacity will be 42 MW with 18 MW of 25 Hz generation and 24 MW of 50 Hz generation.

The generation of 24 MW at 50 Hz power will reduce the dependency of SFC for conversion of power. The installed capacity of Static Frequency Converters (SFC) is 2 x 15 MW. The demand by KGF is around 10 to 14 MW. SFC is expected to convert only 4

to 8 MW of power to 50 Hz. The 24 MW, 50 Hz power will be directly fed to the system at 66 kV after R&M works. A new 66 kV out-door yard is proposed.

Uprating of these units has been examined. Because of the constraints in water velocity in the penstocks, up-rating is not possible. The physical benefits to be realised after Renovation and Modernisation works are:

a) Restoration of station capacity back to its installed capacity (42 MW)
b) Reduction of down time of units
c) Trouble free operation of the power station
d) Reduction of dependency on static frequency converters
e) Replacement of some 25 Hz units by 50 Hz units
f) Life extension of other 25 Hz units by 10 years

1.1.6 Review, Diagnostic Analysis and Proposed Technical Solutions to the Problems

As already stated, this powerhouse is an old one and therefore all the equipment are obsolete. Besides due to ageing, several operational problems are also felt. The details of the work involved are as follows:

1. Replacement of trash racks at forebay
2. Replacement of Gates at Head works
3. Refurbishment of Butterfly valves
4. Replacement of Main Inlet Valves
5. Refurbishment of Pressure Relief Valves
6. Refurbishment and painting of Draft tubes
7. Painting of penstocks and spiral casings
8. Refurbishment/Replacement of Runners
9. Refurbishment/Replacement of Guide vanes
10. Replacement of Governors
11. Refurbishment/Replacement of Bearings
12. Refurbishment of Cooling water system
13. Re-insulation of stator coils and providing closed ventilation system to 6 nos. of 3 MW, 25 Hz, 2.2 KV units
14. Refurbishment of slip rings
15. Replacement of Generators of 4 x 6 MW, 25 Hz, 2.2 kV units by new 4x6 MW, 50 Hz, 11 kV Generators
16. Providing new 11/66 kV generator transformers, auxiliary transformers, 66 kV out-door yard and 66 kV out-door yard equipment for 50 Hz system.
17. Providing new control and relay panels for 25 Hz and 50 Hz system
18. Providing static excitation system for 25 Hz and 50 Hz units
19. Providing additional set of batteries
20. Refurbishment of fire protection system
21. Modification of transmission system
22. Providing Ground mat for the station
23. Other Civil works

The problem faced and their remedies are discussed as follows:

(A) CIVIL WORKS :

There is heavy sedimentation accumulated over the past 60 years in the balancing reservoir, power channel and forebay. There is also erosion of embankments. These are causing loss of available storage capacity. It is proposed to takeup desilting and deweeding in the head works, balancing reservoir, power channel and forebay.

Lot of weeds have grown around the penstocks and this causes problems in inspection and maintenance of penstocks. It is proposed to take up deweeding and rough concreting of the area surrounding each penstock. The details of other civil works involved are as follows:

(i) Gates at Head works

There are 3 numbers (nos) of river sluice gates and 5 nos of power channel gates at head works. These gates are manually operated. All the power channel gates are operating satisfactorily. There is no leakage or visible dam age. One of the river sluice gate (No.3) is in-operable.

All the gates need overhauling. The river sluice gate which is in-operable is to be replaced/repaired and put back to service. All the gates are proposed to be manually operated and no electrical operation is proposed.

(ii) Trash racks, Gates and Penstock protection valves at Forebay

There are 10 nos. of trash racks and 10 nos. of gates provided at Forebay. These gates are manually operated. Each penstock of 6 MW units is protected with a butterfly valve as Penstock protection valve (PPV) and each penstock of 3 MW unit is protected by a vertical sliding gate having metal to metal sealing arrangement. At present the butterfly valves are not in operating condition. It is ascertained from the station staff that these valves have not been operated for the past 30 years. The butterfly valve of Unit No. 2, which was under shut down, was inspected. The butterfly valve was found in good condition. The trash racks provided before forebay sluices are badly rusted and dilapidate. All the 10 nos of trash racks are to be replaced. These gates require complete overhauling. The butterfly valves are proposed to be refurbished, overhauled and made motor operated.

(iii) Penstocks

There are 10 nos. of penstocks conducting water to 10 Generating Units. The penstock of unit No.2, which was under shut down, was inspected visually. Inside surface of the penstock is in good condition. No rust flakes were observed in the inner surface.

It is proposed to conduct non-destructive test (NDT) on all the 10 penstocks to ascertain the healthiness and residual life of the penstock. If the NDT results suggest improvement works to penstocks, these works are contemplated to be taken up later in a phased manner depending upon the requirement.

(B) ELECTRICAL AND MECHANICAL WORKS

(i) Main Inlet Valves (MIVs)

Vertical sliding with taper wedge gate valves are provided for all the units as MIVs. The MIVs were examined and observed. Due to ageing, lot of problems are being faced during the operation of the valves. In the MIVs of two units, it is observed that the body of the valves have become weak and may puncture in due course. Lot of leakages are observed and as reported from site engineers, the operation of the valves is not reliable. Hence it is proposed to replace these valves along with by-pass valves and other connected valves by new MIVs to have greater reliability in the operation of the MIVs.

(ii) Turbines

There are 10 nos. of reaction type Horizontal Francis Turbines. The runners are made of cast steel. There is a pressure relief valve provided to each turbine. The guide vanes are made of carbon steel and the bushings of guide vanes are not self-lubricating type. Belt driven mechanical governors are provided for each machine. Governor oil is supplied from a tank situated at each unit and the pressure of governor oil is developed by belt driven coupling from the main shaft.

The turbine casings are in good condition. Pitting formations have been observed on the runner surfaces. There is also heavy erosion of surface. There is heavy leakage from turbine casing through wicket gate collars. Guide vanes are in good condition. However the bushings are not self-lubricating type. There is leakage in the seals of pressure relief valve. The draft tubes are in good condition. However a pinhole development has been noticed in draft tube of Unit 6. Fittings are observed in the draft tube of Unit-1.

Turbine Casing

It is proposed to conduct non-destructive test (NDT) on the turbine casings of all the units to ascertain the healthiness and residual strength of the turbine casings. If the NDT results suggest improvement works, these works are contemplated to be taken up in a phased manner. It is proposed to carry out painting work with anti-rusting primer & epoxy paints after cleaning operation.

Runners

There are 2 nos. runners of 3 MW units & 2 nos. runners of 6 MW units available in store stock. It is proposed to use these spare (new) runners to release the old runners. It is now proposed to procure 2 nos. runners of 6 MW units & 4 nos. runners of 3 MW units to replace all the runners with new ones. Out of the released runners, 2 nos. runners of 6 MW units & 3 nos. runners of 3 MW units are proposed to be kept as spares.

Guide Vanes

The guide vanes are in good condition & hence are not proposed to be replaced. There are 51 nos of guide vanes of 6 MW units & 60 nos. of guide vanes of 3 MW units available

in store stock. These can be used to replace any defective guide vane detected during R & M work. No new guide vanes are proposed to be procured. However it is proposed to replace all the bushings of Guide vanes with self lubricating type bushings.

It is proposed to overhaul the pressure relief valve duly replacing all the seals. 2 nos of seals for 6 MW units & 4 nos of seals for 3 MW should be kept as spares. Thus it is proposed to procure 6 nos of seals for 6 MW units & 9 nos of seals for 3 MW units.

Draft Tubes

The draft tubes are proposed to be refurbished & painted with Zinc rich epoxy primer & paint.

(iii) GOVERNORS

The existing governors are very sluggish and obsolete. The spares of these governors are not available. These governors are having very slow response time. This slow response time of governor also causes operational problems in SFC (Static Frequency Converter). The belt drive for governor has inherent problems causing down time.

For speed measurement required for Governor operations, a toothed wheel arrangement or reflective photo diode arrangement is proposed.

(iv) GENERATORS

Shivasamudram Power House is a 25 Hz power station with installed capacity of 42 MW. There are 4 x 6 MW and 6 x 3 MW, 2.2 kV, 25 Hz horizontal Generators. While examining the proposals for R & M works of Generators, following alternatives have been considered.

Alternative 1	Rewinding of all Generators to 25 Hz only and to retain the powerhouse as 25 Hz Power House.
Alternative 2	Converting 25 Hz, 2.2 kV Power House to 50 Hz, 11 kV Power house by suitably rewinding the generators. In this case SFC is proposed to be used for converting 50 Hz power to 25 Hz power to feed KGF loads.
Alternative 3	Providing 2 new units of 25 MW capacity each by providing a new larger size penstock with 'Y' bends.
Alternative 4	Retaining some units to generate power at 25 Hz & convening remaining units to generate power at 50 Hz. SFC is proposed in this case to be used for converting excess 25 Hz generation to 50 Hz after feeding KGF loads.

The above alternatives are discussed in detail as follows:

Alternative 1	This is a simple alternative, as this requires only restacking, re-varnishing of cores & rewinding of stators & rotors. The total cost of R & M works of Generators only would be Rs. 260 lakhs.

Shivasamudram Power House continues to be a 25 Hz Power House and the 25 Hz power will have to be converted to 50 Hz power by SFC. However this alternative has the following disadvantages.

Alternative 2

a) KGF is the only consumer of 25 Hz power, whose demand is going down gradually. The KGF loads are anticipated to be continued for the next 10 years only. The contract demand will be 14 MW whereas the peak load will be 10 MW. The remaining power of 28 to 32 MW generated at 25 Hz will have to be converted to 50 Hz power by SFC.
b) Maintenance of SFC is difficult as the spares are to be imported. Any trouble in one unit of SFC would result in break down of 25 Hz generation.
c) 25 Hz equipment, relays and instruments are obsolete & not readily available. Therefore maintenance of 25 Hz station is difficult.

In view of the above, this alternative is not considered.

Alternative 2 In this alternative it is proposed to convert all the units to 50 Hz, 11 kV units. The work involved has two options:

a) To replace the old 25 Hz generators with new 50 Hz generators.
b) To convert the existing 25 Hz generators to 50 Hz units by suitably modifying the rotor & stator.

The estimated cost of R & M works of generator for option (a) is Rs. 885 lakh and for option (b) is Rs. 900 lakh. The cost includes the expenditure on R&M works of 25 Hz units. This alternative would bring Shivasamudram Power House in line with the country wide standard of latest generation trends with modem control system. This alternative has the advantage of directly feeding 50 Hz power to grid. However, this option requires conversion of 50 Hz, 11 kV power to 25 Hz, 78 kV power to feed KGF loads. M/S BHEL, who has supplied the SFC sets have confirmed that the existing SFC sets can not be modified to convert 50 Hz power to 25 Hz power. Therefore this alternative is not considered.

Alternative 3

This proposal was considered since the units have served for more than 60 years. In this proposal two new units of higher capacity of the order of about 25 MW was thought off, since on inspection it was found that there is space provided for laying additional penstocks. When cost economics was worked out, it is found that this cost will be almost four times the renovation and modernisation cost of

the existing units. Also since lot of spares for existing units are available in stores, so this proposal was dropped.

Alternative 4

In view of the constraints in Alternative 1, 2 & 3, it is proposed to retain 6 units of 3 MW sets to generate power at 25 Hz and convert remaining 4 nos. of 6 MW units to 50 Hz units at 11 kV. This alternative has the following advantages.

a) As there is 18 MW of 25 Hz generation, 10 to 14 MW demand of KGF can be directly met without frequency conversion. Even outage of 1 or 2 units will not affect the supply to KGF. Only the excess power of 25 Hz is convened to 50 Hz through SFC to feed the grid.

b) During normal course, as SFC is expected to convert about 8 MW of 25 Hz Power to 50 Hz, the load on SFC is reduced and even outage of 1 unit (2 channels) of SFC will not cause problems.

c) By converting 4 nos. of 6 MW units to 50 Hz, the generators can be equipped with modernised controls to be in line with latest trends. 50 Hz power can therefore be directly fed to the grid without depending on SFC.

Alternative 4 is proposed to be adopted as it is technically more advantageous and also the 25 Hz load requirement of KGF can be met without any interruption and the dependability on SFC is reduced to a greater extent.

Stator Winding

The stator winding to be rewound with new copper coils with class *F* epoxy insulation and cleaning of Rotor is also proposed.

After obtaining budgetary offers from M/S BHEL and M/S BANGALORE ELECTRICAL WORKS LTD., it is observed that the total cost for rewinding of. generator is Rs. 13.85 lakhs per generator and the cost for replacing the old generator by new one is Rs. 162 lakhs per generator. Hence it is proposed that stator windings are to be replaced with new copper coils with class *F' epoxy insulation and the proposal for replacement of old generator by new generator is not considered. The core stamping of stator are to be removed, cleaned, revarnished and re-stacked.

Excitation System

The existing excitation system is of centralised type. The excitation system is obsolete, very slow in response. Due to ageing, the system is not functioning satisfactorily. Further due to slow response of the exciter, the operation of SFC is also affected. AYR is obsolete and very sluggish in operation.

Recently, due to loss of excitation, the unit-2 attained runaway speed, since no proper controls are provided, and the foundation of the unit was severely damaged.

It is proposed to replace the excitation system with static excitation scheme and latest controls to each unit. There is space in the machine hall to install the panel. It is proposed to provide redundancy in Thyristor modules.

Bearings

Each unit is having 3 pedestal bearings of size 26", 30" and 28" respectively. These bearings are filled with oil for lubrication and cooling. The oil is cooled by the cooling water drawn from penstocks. The lining of the bearing is worn out. It is proposed to re-metal the bearings with white metal and machine the bearings.

Generation voltage (2.2 kV System)

The generation voltage is 2.2 kV and it is connected to 2.2 kV Breaker by Oil filled, lead sheathed, single core copper cables arranged in tri-foil formation. Three core Current Transformers (CTs) of ratio 1500:5 are provided for protection and metering. The sheath of the cables occasionally get punctured which causes leakage of oil. The 2.2 kV breaker contacts need periodic maintenance. There are no other major problems in this system.

It is proposed to retain the existing 2.2 kV breakers and the 2.2 kV cables as the spares are available. It is also proposed' to provide new control and instrumentation cables. However it is proposed to replace 2,2 kV CTs to accommodate latest Protective Scheme.

For the 6 MW units, which are going to generate power at 50 Hz and 11 kV, it is proposed to use new CTs and cables. The released 2.2 kV cables from 6 MW units can be used as spares for 2.2 kV system of 25 Hz units.

(v) CONTROL PANELS

There are only over current and differential controls for the Units. There is no overspeed protection or loss of excitation protection. The relays and meters are all rated for 25 Hz. The relays and meters are very sluggish and very slow. They are also obsolete. It is difficult to maintain the system, as the spares are not available. The meters do not give accurate reading causing problems to the operating staff. There are no protections provided for the turbine operations. The inadequate protection has caused failure of foundation of Unit-2, damage to shaft of unit-9 and failure of windings of unit-4, 5 and 6.

For 25 Hz unit it is proposed to replace the Unit panels, Auxiliary supply panels and Line panels (SI, S2, Ml and M2) with new panels having latest control, metering and protective schemes. For 50 Hz units and lines, it is proposed to procure new panels with latest control, metering, and protective schemes.

It is also proposed to procure turbine control panel for each unit to facilitate turbine operations from the machine hall. It is proposed to utilize the same space of existing control room for mounting the new control panels. It is proposed that the opening at the entrance and sides be covered with soundproof glass panels. It is also proposed to provide

Air Conditioning facility to Control Room where sophisticated protective and metering schemes are installed.

(vi) BREAKERS

At Present 2.2 kV breakers are provided to all the 10 units. All the 5 transformer banks are also provided with 2.2 kV breakers. On the 78 kV side there are 5 nos 78 kV breakers for Transformers and 4 numbers 78 kV breakers for SI, S2, Ml and M2 lines. All the breakers are indoor type oil breakers.

Though the Breakers have served their life, since some of the spares are available in store and also the Breakers released from 6 MW units can be used as spares, it is proposed to continue with the existing Breakers for 25 Hz, 2.2 kV systems. On 78 kV side it is proposed to retain all the breakers, as there are no major problems. Only overhauling of the breakers is proposed. It is proposed to procure 4 nos of outdoor SF6, 66 kV breakers for units & 2 nos. of outdoor SF6, 66 kV breakers for lines with necessary outdoor CTs for 50 Hz systems.

(vii) Station Battery

At present 1 set of 300 AH, 110 V Battery is in service. The Battery has served its life. Hence, it is proposed to provide two sets of 300 AH battery with charger to have a reliable D.C supply in the station.

(C) GENERAL SERVICES

(i) Fire Protection System

Mulsifyre system with water pressure is provided for fire protection in the whole powerhouse. However the system is not in operation at present due to some leakage in the system. The water required for the system is tapped from the penstocks provided for 6 MW units. The system is to be refurbished and made operative. It is proposed to provide auto release CO_2 fire protection system.

(ii) Illumination

The illumination of power house, control room, generator hall, outdoor yard etc. are with incandescent lamps which require frequent replacement. The visibility is also poor. The system is proposed to be changed with suitable light fittings and fluorescent lamps of 50 Hz system to have better illumination. It is also proposed to provide DC illumination at strategic points for ease of operation during shut down.

(iii) Cranes

The powerhouse is equipped with one no 45 ton EOT crane, 1 no 20 ton and 1 no 10 ton overhead cranes (hand operated). The cranes are to be tested for establishing the safe working load.

(iv) Station Auxiliary Supply

The existing Auxiliary Transformers with 25 Hz system are proposed to be retained to meet the requirements of Auxiliaries operating at 25 Hz. However it is proposed to have 2 nos. auxiliary transformers of 250 kVA capacity each with 11 kV, 50 Hz to meet the requirements of Auxiliaries pertaining to 50 Hz system.

(v) Station Grounding

At present the station is operating with ungrounded system. It is felt necessary to have grounded neutral system to meet the requirements of the latest protection system. Hence it is proposed to provide neutral grounding system by providing ground mat in the 66 kV outdoor yard (ODY) and connecting all the equipments to ground mat.

It is proposed to measure the earthing resistance in the area adjacent to the Power House and also in the proposed 66 kV ODY area.

(vi) Cooling Water System

It is proposed to refurbish the cooling water system by strengthening the tank, replacement of pipes and valves.

(vii) Trolley and Winch System

It is also proposed to overhaul the inclined trolley for access to Power Station and Heavy-duty winch system for transporting materials to the Power Station to make them reliable to avoid unexpected and costly interruption of Renovation and Modernization works.

(D) OUTDOOR YARD

The existing outdoor yard is provided with only 12 nos. of 78 kV lightening arresters for taking out 4 transmission lines to SFC station. It is proposed to provide individual generator transformer for each of the 6 MW generating units, which are being convened to 50 Hz system, to have easy access for attending the operation and maintenance works. Alternatively if one transformer for two Units may be provided. However considering the maintenance aspects and dependency in reliability of the transformer and breakers, it is proposed to provide individual generator transformer for each of the 6 MW Generating Units.

This outdoor yard is proposed to be modified to accommodate all the 4 unit bays, 2 line bays and 1 PT bay as there is constraint of space in out door yard for the 66 kV system.

It is proposed to procure water cooled 8 MVA, 11/66 kV, 50 Hz, with off load tap changer Generator Transformers for 4 nos. of 6 MW Units for 66 kV, 50 Hz System.

(E) TRANSMISSION LINES

With regard to 78 kV system, the existing two lines running to Kolar Gold Fields will be retained by shifting the location of lightening arresters only and also to adopt 78 kV

supply to SFC station by providing necessary tapping arrangements from the 78 kV Shiva-KGF lines at SFC.

The other two 78 kV lines from Shivasamudram Station to SFC are proposed to evacuate power from the ODY at 66 kV. 50 Hz by modifying the lines suitably to transmit 66 kV, 50 Hz power to SFC from outdoor yard.